Installation Manual
MMI-20039473, Rev AE
October 2022

Micro Motion™ 5700 Transmitters with Intrinsically Safe Outputs

All Installation Types (Integral, 4-Wire, and 9-Wire)

MICRO MOTION™

EMERSON™

Safety messages

Safety messages are provided throughout this manual to protect personnel and equipment. Read each safety message carefully before proceeding to the next step.

Safety and approval information

This Micro Motion product complies with all applicable European directives when properly installed in accordance with the instructions in this manual. Refer to the EU Declaration of Conformity for directives that apply to this product. The following are available: the EU Declaration of Conformity, with all applicable European directives, and the complete ATEX installation drawings and instructions. In addition, the IECEx installation instructions for installations outside of the European Union and the CSA installation instructions for installations in North America are available at Emerson.com or through your local Micro Motion support center.

Information affixed to equipment that complies with the Pressure Equipment Directive, can be found at Emerson.com. For hazardous installations in Europe, refer to standard EN 60079-14 if national standards do not apply.

Other information

Troubleshooting information can be found in the Configuration Manual. Product data sheets and manuals are available from the Micro Motion website at Emerson.com.

Return policy

Follow Micro Motion procedures when returning equipment. These procedures ensure legal compliance with government transportation agencies and help provide a safe working environment for Micro Motion employees. If you fail to follow Micro Motion procedures, then Micro Motion will not accept your returned equipment.

Return procedures and forms are available on our web support site at Emerson.com, or by calling the Micro Motion Customer Service department.

Contents

Chapter 1 Before you begin 5
1.1 About this document 5
1.2 Hazard messages 5
1.3 Related documents 6
Chapter 2 Planning 7
2.1 Installation checklist 7
2.2 Power requirements 8
Chapter 3 Mounting and sensor wiring 11
3.1 Mounting and sensor wiring for integral-mount transmitters 11
3.2 Mounting transmitters 11
3.3 Wire a remote-mount transmitter to the sensor 15
3.4 Ground the meter components 18
3.5 Rotate the transmitter on the sensor (optional) 19
3.6 Rotate the user interface on the transmitter (optional) 21
3.7 Rotate the sensor wiring junction box on a remote-mount transmitter (optional) 22
Chapter 4 Wiring the channels 25
4.1 Installation types for the 5700 transmitter 25
4.2 Available channels 25
4.3 Barriers verified by Micro Motion 26
4.4 mA power requirements 26
4.5 FO and DO power requirements 28
4.6 Access the wiring channels 29
4.7 Wire the Channel A mA/HART Output 30
4.8 Wire the Channel B and C mA Output 31
4.9 Wire the mA/SIL output 32
4.10 Wire the mA/HART multidrop installation 32
4.11 Wire the Frequency Output or the Discrete Output 33
Chapter 5 Wiring the power supply 35
Chapter 6 Power up the transmitter 37
Chapter 7 Configuring the transmitter with Guided Setup 39
Chapter 8 Using the display controls 41
Chapter 9 Available service port connection 43
Appendix A Wire the Micro Motion 5700 to the Micro Motion 3100 transmitter 45

1 Before you begin

1.1 About this document

This manual provides information on planning, mounting, wiring, and initial setup of the Micro Motion 5700 transmitter. For information on full configuration, maintenance, troubleshooting, or service of the transmitter, see the .

The information in this document assumes that users understand basic transmitter and sensor installation, configuration, and maintenance concepts and procedures.

1.2 Hazard messages

This document uses the following criteria for hazard messages based on ANSI standards Z535.6-2011 (R2017).

DANGER
Serious injury or death will occur if a hazardous situation is not avoided.

WARNING
Serious injury or death could occur if a hazardous situation is not avoided.

CAUTION
Minor or moderate injury will or could occur if a hazardous situation is not avoided.

NOTICE
Data loss, property damage, hardware damage, or software damage can occur if a situation is not avoided. There is no credible risk of physical injury.

Physical access

WARNING
Unauthorized personnel can potentially cause significant damage and/or misconfiguration of end users' equipment. Protect against all intentional or unintentional unauthorized use.

Physical security is an important part of any security program and fundamental to protecting your system. Restrict physical access to protect users' assets. This is true for all systems used within the facility.

1.3 Related documents

You can find all product documentation on the product documentation DVD shipped with the product or at Emerson.com.

See any of the following documents for more information:

- *Micro Motion 5700 Product Data Sheet*
- *Micro Motion 5700 Transmitters with Intrinsically Safe Outputs: Configuration and Use Manual*
- *Coriolis Flow Meter with Micro Motion 5700 Transmitters Safety Manual for Safety Instrumented Systems (SIS)*
- *Modbus Interface Tool*
- Sensor installation manual

2 Planning

2.1 Installation checklist

- ☐ If possible, install the transmitter in a location that will prevent direct exposure to sunlight. The environmental limits for the transmitter may be further restricted by hazardous area approvals.

- ☐ If you plan to mount the transmitter in a hazardous area:

  WARNING

  — Verify that the transmitter has the appropriate hazardous area approval. Each transmitter has a hazardous area approval tag attached to the transmitter housing.

  — Ensure that any cable used between the transmitter and the sensor meets the hazardous area requirements.

  — For ATEX/IECEx installations, strictly adhere to the safety instructions documented in the ATEX/IECEx approvals documentation available on the product documentation DVD shipped with the product or at Emerson.com.

- ☐ Verify that you have the appropriate cable and required cable installation parts for your installation. For wiring between the transmitter and sensor, verify the maximum cable length does not exceed 1,000 ft (305 m).

- ☐ Ensure that you use a twisted-pair instrument cable for all output connections.

- ☐ You can mount the transmitter in any orientation as long as the conduit openings do not point upward.

  Installing the transmitter with the conduit openings facing upward risks condensation moisture entering the transmitter housing, which could damage the transmitter.

  Following are examples of possible orientations for the transmitter.

Preferred orientation	Alternate orientations	
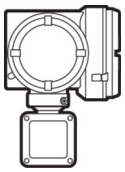	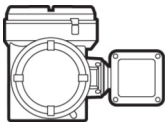	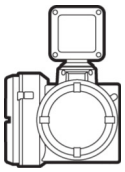

- ☐ Any fittings, adapters, or blanking elements used on either conduit entries or threaded joints that are a part of flame proof joints must comply with the requirements of EN/IEC 60079-1 & 60079-14 or CSA C22.2 No 30 & UL 1203 for Europe/International and North America respectively.

  Only qualified personnel can select and install these elements in accordance with EN/IEC 60079-14 for ATEX/IECEx or to NEC/CEC for North America.

- ☐ To maintain the Ingress protection thread sealant, a sealing washer, or O-ring must be applied:
  - For Zone 1 applications thread sealant must also comply with the requirements of EN/IEC 60079-14 and thus must be non-setting, non-metallic, non-combustible, and maintain earthing between the equipment and conduit.
  - For Class I, Groups A, B, C, and D applications thread sealant must also comply with the requirements of UL 1203/CSA C22.2 No. 30.
- ☐ Mount the meter in a location and orientation that satisfies the following conditions:
  - Allows sufficient clearance to open the transmitter housing cover. Install with 8 in (203 mm) to 10 in (254 mm) clearance at the wiring access points.
  - Provides clear access for installing cabling to the transmitter.
  - Provides clear access to all wiring terminals for troubleshooting.

2.2 Power requirements

Self-switching AC/DC input, automatically recognizes supply voltage:

- 85 to 240 VAC, 50/60 Hz, 6 watts typical, 11 watts maximum
- 18 to 100 VDC, 6 watts typical, 11 watts maximum

Note

For DC power:

- Power requirements assume a single transmitter per cable.
- At start-up, the power source must provide a minimum of 1.5 amps of short-term current per transmitter and not pull voltage below 18 VDC.
- Length and conductor diameter of the power cable must be sized to provide 18 VDC minimum at the power terminals, at a load current of 0.7 amps.

Cable sizing formula

M = 18V + (R x L x 0.5A)

- M: minimum supply voltage
- R: cable resistance
- L: cable length (in Ω/ft)

Typical power cable resistance at 68 °F (20.0 °C)

Wire gauge	Resistance
14 AWG	0.0050 Ω/ft
16 AWG	0.0080 Ω/ft
18 AWG	0.0128 Ω/ft
20 AWG	0.0204 Ω/ft
2.5 mm^2	0.0136 Ω/m

Wire gauge	Resistance
1.5 mm^2	0.0228 Ω/m
1.0 mm^2	0.0340 Ω/m
0.75 mm^2	0.0460 Ω/m
0.50 mm^2	0.0680 Ω/m

2.2.1 Maximum cable lengths between sensor and transmitter

The maximum cable length between the sensor and transmitter, which are installed separately, is determined by cable type.

Cable type	Wire gauge	Maximum length
Micro Motion 4-wire remote mount	Not applicable	• 1,000 ft (305 m) without Ex-approval • 500 ft (152 m) with IIC rated sensors • 1,000 ft (305 m) with IIB rated sensors
Micro Motion 9-wire remote mount	Not applicable	60 ft (18 m)
User-supplied 4-wire	VDC 22 AWG (0.326 mm^2)	300 ft (91 m)
	VDC 20 AWG (0.518 mm^2)	500 ft (152 m)
	VDC 18 AWG (0.823 mm^2)	1,000 ft (305 m)
	RS-485 22 AWG (0.326 mm^2) or larger	1,000 ft (305 m)

3 Mounting and sensor wiring

3.1 Mounting and sensor wiring for integral-mount transmitters

There are no separate mounting requirements for integral transmitters, and there is no need to connect wiring between the transmitter and the sensor.

3.2 Mounting transmitters

There is one option available for mounting 1600 remote transmitters:

- Mount the transmitter to an instrument pole.

3.2.1 Mount the transmitter to a wall or flat surface

Prerequisites

- Ensure that the surface is flat and rigid and that it does not vibrate or move excessively.
- Confirm that you have the necessary tools and the mounting kit shipped with the transmitter.

Procedure

1. Attach the mounting bracket to the transmitter and tighten the screws to 80 in lbf (9.04 N m) to 90 in lbf (10.17 N m).

Figure 3-1: Mounting bracket to an aluminum transmitter

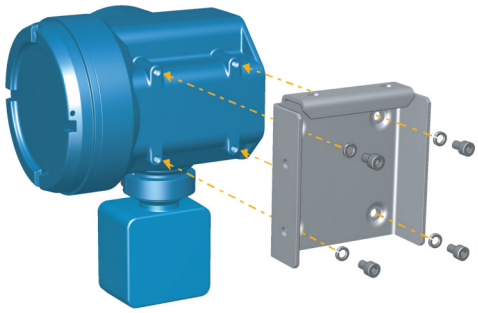

Figure 3-2: Mounting bracket to a stainless steel transmitter

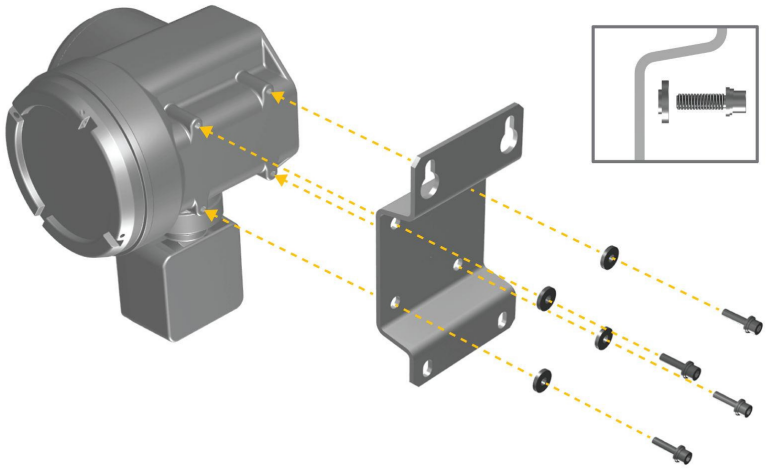

2. For wall-mount installations, secure the mounting bracket to the prepared surface.

Figure 3-3: Wall-mounting bracket and dimensions for an aluminum transmitter

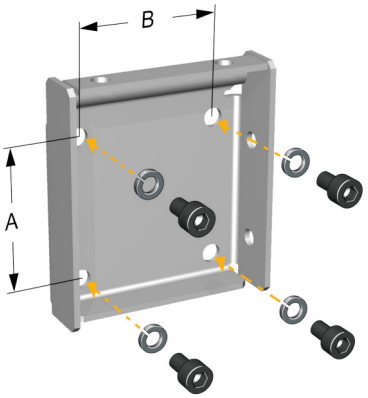

A. 2.8 in (71 mm)
B. 2.8 in (71 mm)

Figure 3-4: Wall-mounting bracket and dimensions for a stainless steel transmitter

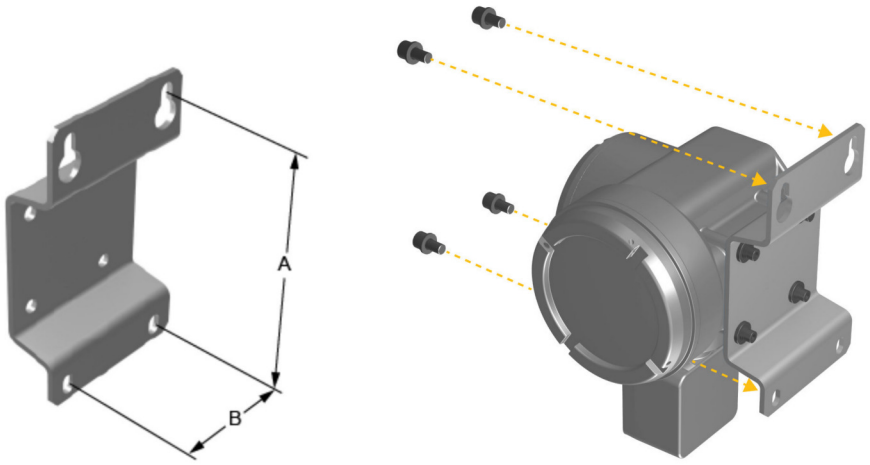

A. 7.51 in (190.8 mm)
B. 3.67 in (93.2 mm)

3. For aluminum transmitters, place and attach the transmitter-mounting bracket to the mounting bracket secured to the wall or instrument pole.

Figure 3-5: Attaching and securing an aluminum transmitter to the mounting bracket

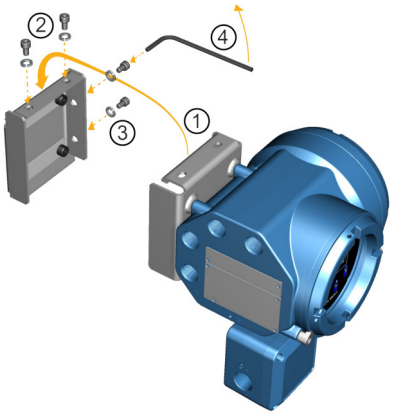

Tip
To ensure the mounting bracket holes are aligned, insert all attachment bolts into place before tightening.

3.2.2 Mount the transmitter to a pole

Prerequisites

- Ensure that the instrument pole extends at least 12 in (305 mm) from a rigid base and is no more than 2 in (51 mm) in diameter.
- Confirm that you have the necessary tools, and the instrument-pole mounting kit shipped with the transmitter.

Procedure

For pole-mount installations, fit the U-bolt mounting piece to the instrument pole.

Figure 3-6: Pole-mounting bracket attachment for an aluminum transmitter

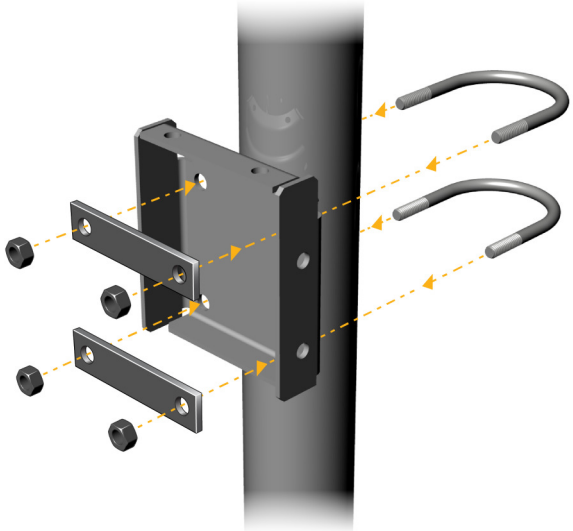

Figure 3-7: Pole-mounting bracket attachment for a stainless steel transmitter

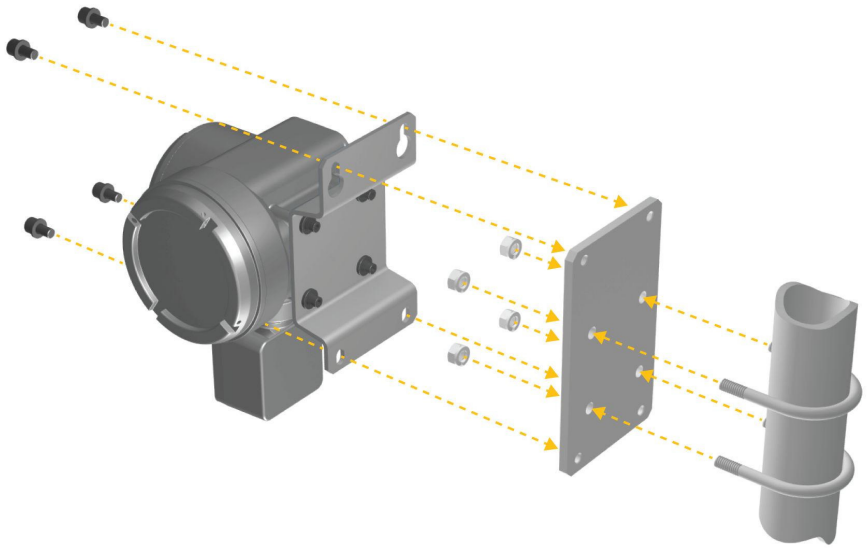

3.3 Wire a remote-mount transmitter to the sensor

Use this procedure to wire a four-wire or nine-wire remote-mount transmitter to the sensor.

Prerequisites

- Prepare the nine-wire cable as described in the *Micro Motion 9-Wire Flow Meter Cable Preparation and Installation Guide*.
- Connect the cable to the sensor-mounted core processor or junction box as described in the sensor documentation. You can access all product documentation on the documentation DVD shipped with the product or at Emerson.com.

Procedure

1. Remove the transmitter-to-sensor wiring compartment cover to reveal the terminal connections.

Figure 3-8: Removal of the transmitter-to-sensor wiring compartment cover

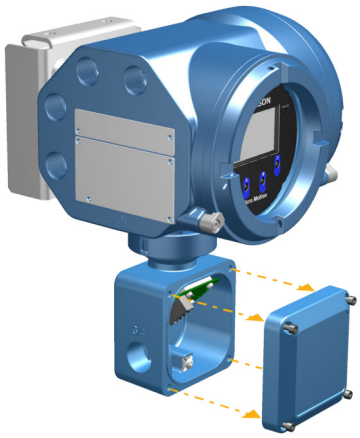

2. Feed the sensor wiring cable into the transmitter wiring compartment.

Figure 3-9: Sensor wiring feedthrough

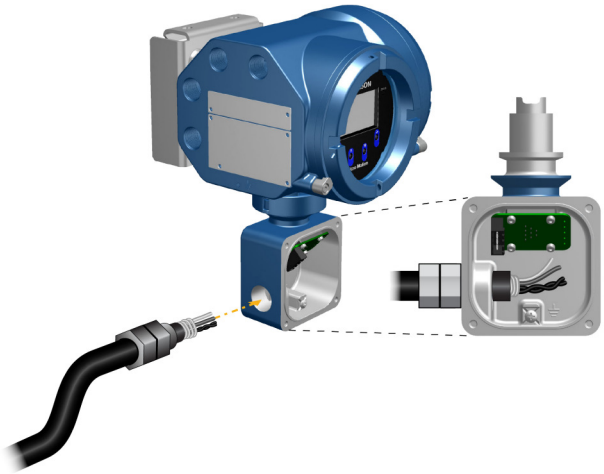

3. Connect the sensor wires to the appropriate terminals.

Important
Terminate the four-wire cable drain wires only at the sensor/core processor end of the cable. See the sensor installation manual for more detail. Do not connect the four-wire cable drain wires to the ground screw located inside the junction box.

- See Figure 3-10 for four-wire terminal connections.
- See Figure 3-11 for nine-wire terminal connections.

Figure 3-10: Four-wire transmitter-to-sensor wiring connections

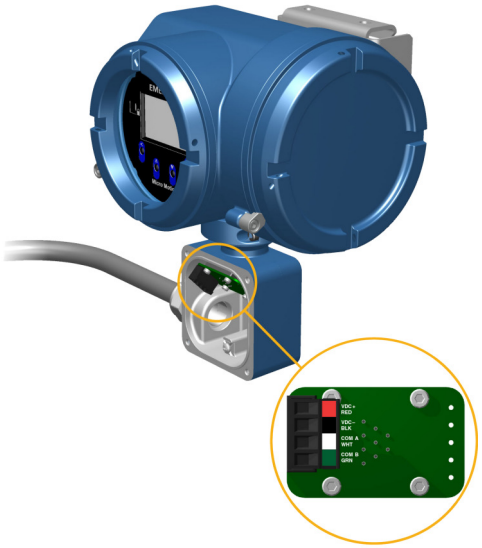

Figure 3-11: Nine-wire transmitter-to-sensor wiring connections

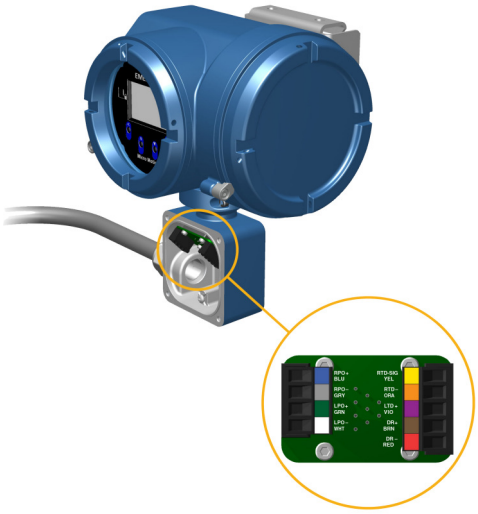

Note
Connect the four drain wires in the nine-wire cable to the ground screw located inside the junction box.

4. Replace the transmitter-to-sensor wiring compartment cover and tighten the screws to 14 in lbf (1.58 N m) to 15 in lbf (1.69 N m).

3.4 Ground the meter components

In 4-wire or 9-wire remote installations, the transmitter and sensor are grounded separately.

Prerequisites

NOTICE
Improper grounding could cause inaccurate measurements or meter failure.

WARNING
Improper grounding could result in an explosion causing death or serious injury.

Note
For hazardous area installations in Europe, refer to standard EN 60079-14 or national standards.

If national standards are not in effect, adhere to the following guidelines for grounding:

- Use copper wire, 14 AWG (2.08 mm^2) or larger wire size.
- Keep all ground leads as short as possible, less than 1 Ω impedance.
- Connect ground leads directly to earth, or follow plant standards.

Procedure

1. Ground the Coriolis sensor according to the instructions in the sensor installation manual for your Coriolis sensor.
2. Ground the transmitter according to applicable local standards, using the transmitter's internal or external ground screw.
   - The earth ground terminal is located inside the power wiring compartment.
   - The external ground screw is located on the outside of the transmitter housing below the transmitter tag.

3.5 Rotate the transmitter on the sensor (optional)

In integral installations, you can rotate the transmitter on the sensor up to 360° in 45° increments.

Procedure

1. Using a 4 mm hex key, loosen and remove the clamp securing the transmitter head in place.

Figure 3-12: Removal of the sensor clamp

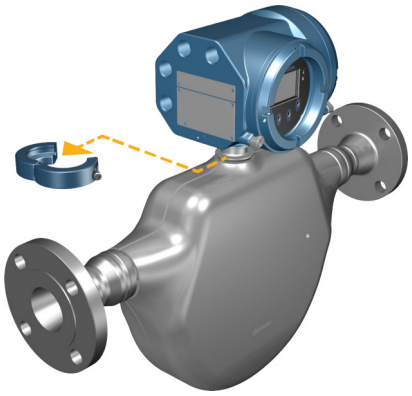

2. Gently lift the transmitter straight up, and rotate the transmitter to the desired position.

   You can rotate the transmitter to any of the eight positions, but a stop exists that will not allow a full 360° rotation.

Figure 3-13: Rotate transmitter head

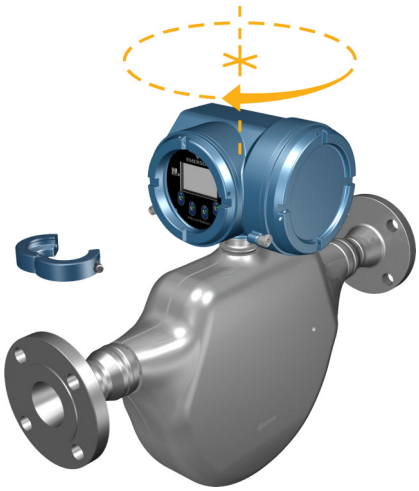

3. Gently lower the transmitter onto the base, confirming that the transmitter is in a locked position.

4. Replace the clamp in its original position and tighten the cap screw. Torque to 28 in lbf (3.16 N m) to 30 in lbf (3.39 N m).

Figure 3-14: Re-attachment of the sensor clamp

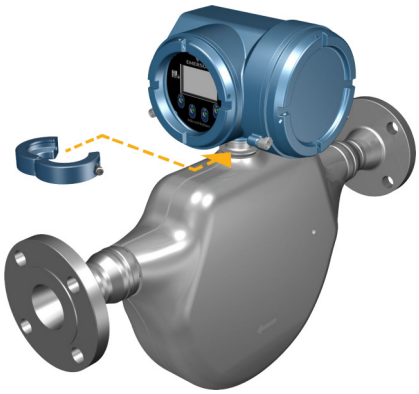

3.6 Rotate the user interface on the transmitter (optional)

The user interface on the transmitter electronics module can be rotated 90°, 180°, or 270° from the original position.

Figure 3-15: Display components

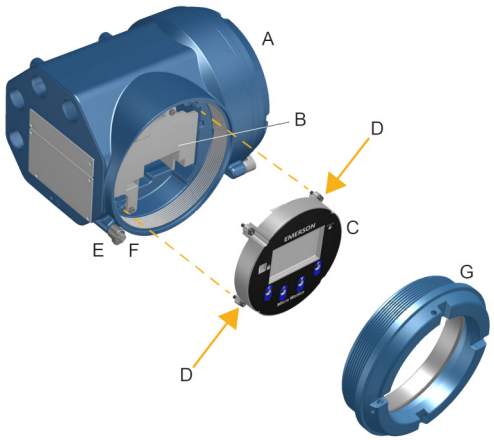

A. *Transmitter housing*
B. *Sub-bezel*
C. *Display module*
D. *Display screws*
E. *End-cap clamp*
F. *Cap screw*
G. *Display cover*

Procedure

1. Shut off power to the unit.

   WARNING
   If the transmitter is in a hazardous area, wait five minutes after disconnecting the power. Failure to do so could result in an explosion causing death or injury.

2. Loosen and rotate the end cap clamp so that it does not interfere with the cover.
3. Turn the display cover counterclockwise to remove it from the main enclosure.
4. Carefully loosen the captive display screws while holding the display module in place.
5. Carefully pull the display module out of the main enclosure.
6. Rotate the display module to the desired position.

7. Gently press the display module back onto the connector.
8. Tighten display screws.
9. Place the display cover onto the main enclosure.
10. Turn the display cover clockwise until it is fully seated.
11. Replace the end-cap clamp by tightening the cap screw.
12. Restore power to the transmitter.

3.7 Rotate the sensor wiring junction box on a remote-mount transmitter (optional)

In remote-mount installations, you can rotate the sensor wiring junction box on the transmitter plus or minus 180º.

Procedure

1. Using a 4 mm hex key, loosen and remove the clamp securing the sensor wiring junction box in place.

Figure 3-16: Removal of the clamp

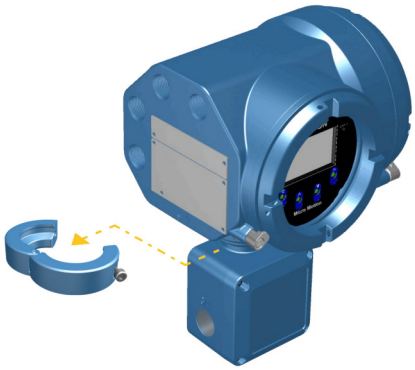

2. Gently rotate the junction box to the desired position.
   You can rotate the junction box plus or minus 180° to any position.

Figure 3-17: Rotate the transmitter on the junction box

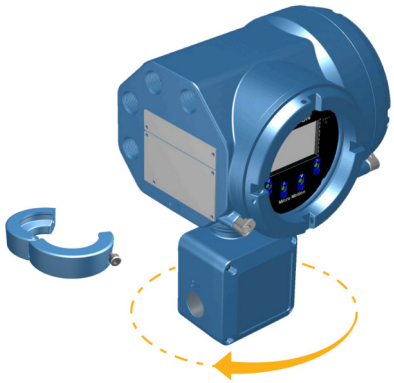

3. Gently set the junction box into its new position, confirming that the position is locked.
4. Replace the clamp in its original position and tighten the cap screw. Torque to 28 in lbf (3.16 N m) to 30 in lbf (3.39 N m).

Figure 3-18: Re-attach the clamp

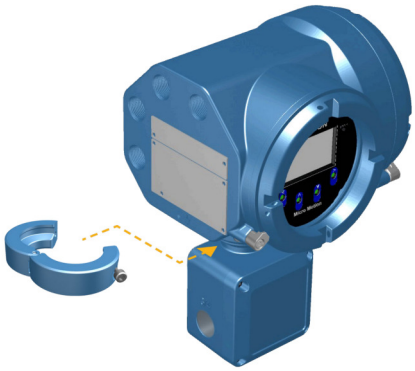

4 Wiring the channels

4.1 Installation types for the 5700 transmitter

WARNING

If you are installing the transmitter in a hazardous area, refer to Micro Motion approval instructions shipped with the product or available from the Emerson website. Improper installation in a hazardous area can cause an explosion resulting in injury or death.

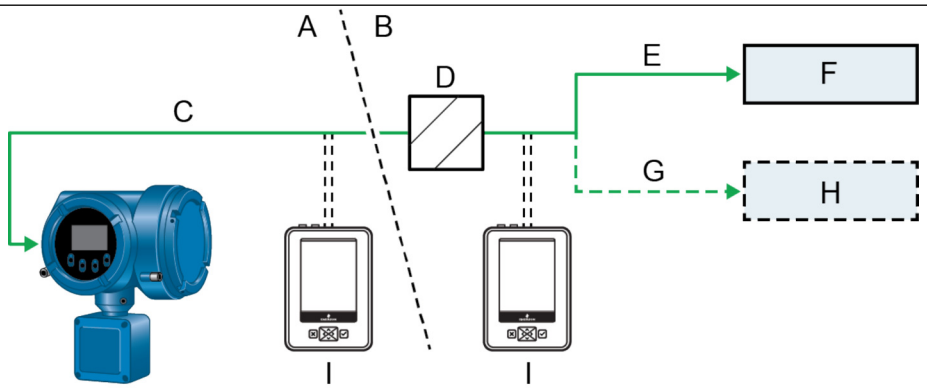

A. Hazardous area
B. Safe area
C. 2-wire signal cable
D. Barrier
E. 4-20 mA, FO, or DO
F. Signal input device
G. HART variables
H. DCS
I. Emerson AMS Trex communicator

4.2 Available channels

Signal	Channel A		Channel B		Channel C		Channel D	
Wiring terminals	1	2	3	4	5	6	7	8
mA outputs	mA output (1) (HART)		mA output (2)		mA output (3)		N/A	
Frequency outputs	N/A		N/A		Frequency output (1)		Frequency output (2)	
Discrete outputs	N/A		N/A		Discrete output (1)		Discrete output (2)	
Ui	30 V		30 V		30 V		30 V	
Ii	484 mA		484 mA		484 mA		484 mA	

Signal	Channel A	Channel B	Channel C	Channel D
Pi	2.05 W	2.05 W	2.05 W	2.05 W
Ci	150 pF	150 pF	150 pF	150 pF
Li	0 µH	0 µH	0 µH	0 µH

4.3 Barriers verified by Micro Motion

The following table lists the barriers that Micro Motion has verified with the 5700 transmitter. For other barriers, refer to the manufacturer's data sheet.

Table 4-1: Barriers verified by Micro Motion

Vendor	Barrier
Micro Motion	505
Pepperl & Fuchs	KFD2-STC1-EX1
Pepperl & Fuchs	KFD2-STC4-EX1
MTL	787S+
MTL	7707P+
MTL	7787+
MTL	5042
MTL	3046B
MTL	7728P+
MTL	4541
STAHL	9002/13-280-110-00
PR Electronics	5106

4.4 mA power requirements

The supply voltage required by the 5700 transmitter depends on the total resistance in the mA loop. This includes all sensor resistance and wire resistance.

Channel A mA HART terminal requirements

Use the following chart to determine the required supply voltage for Channel A based on loop resistance.

Figure 4-1: Channel A mA/HART supply voltage and loop resistance

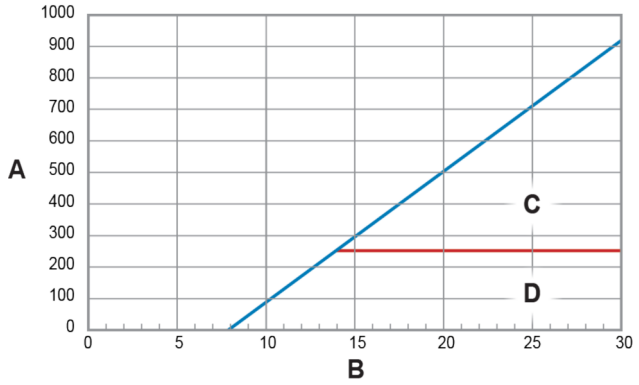

A. Total loop resistance R_{max} (including barrier)
B. Supply voltage VDC (volts)
C. Operating region with HART
D. Operating region without HART (includes the C range)

Channel B or C terminal requirements

Use the following chart to determine the required supply voltage for Channel B or C based on loop resistance.

Figure 4-2: Channel B and C mA output supply voltage and loop resistance

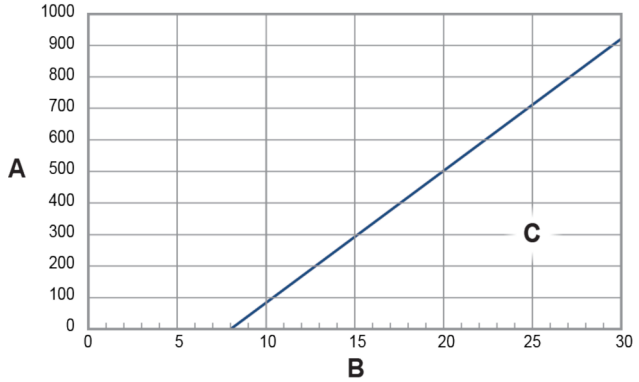

A. Total loop resistance R_{max} (including barrier)
B. R_{load}
C. Supply voltage VDC (volts)
D. Operating region

Note
Rmax = (Vsupply - 8) / 0.024
mA Output is linear with process from 3.8 to 20.5 mA, per NAMUR NE-43 (February 2003).

4.5 FO and DO power requirements

The supply voltage required by the 5700 transmitter depends on the total resistance in the mA loop. This includes all sensor resistance and wire resistance.

Channel C or D terminal requirements

Use the following chart to determine the required supply voltage for Channel C or D based on loop resistance.

Figure 4-3: Channel C or D DO/FO supply voltage and loop resistance

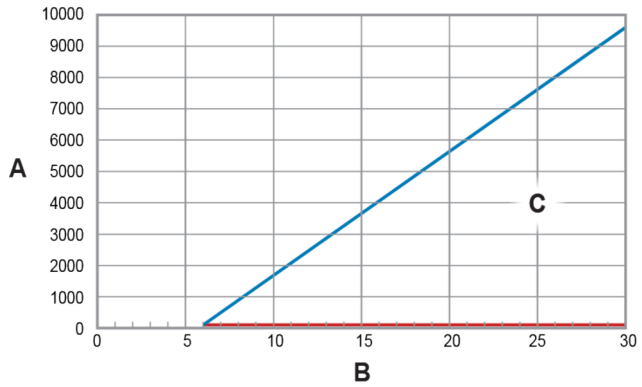

Blue line = Maximum
Red line = Minimum

A. *External resistor R_{load}*
B. *Supply voltage VDC (volts)*
C. *Operating region*

Note
Rmax = (Vsupply - 6) / 0.0025
Rmin = 100Ω

Figure 4-4: Output high and low voltages

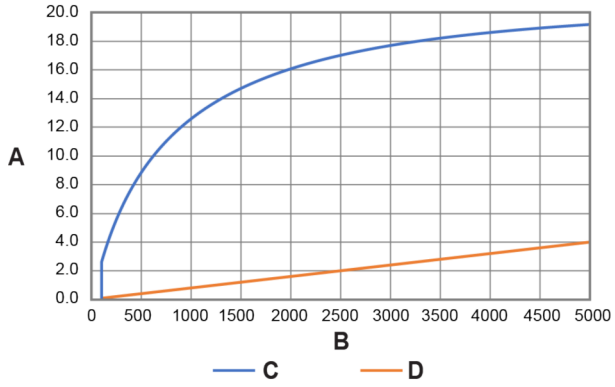

A. *Output voltage (V)*
B. *Load resistance (ohm)*
C. *High voltage ≈ (Vsupply -1.8V) * RL / (1200 + RL)*
D. *Low voltage ≈ 0.0008 * RL*

Minimum resistance = 100Ω
Maximum resistance = 9.6kΩ

4.6 Access the wiring channels

Procedure

1. Remove the wiring access cover to reveal the I/O wiring terminal block connectors.

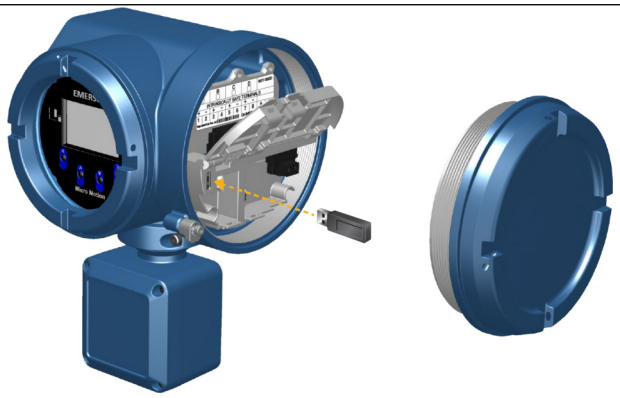

2. Confirm which transmitter channels are activated, or **ON**, and identify the type of configuration you will be wiring to based on the options available.

Figure 4-5: Activated channel identification

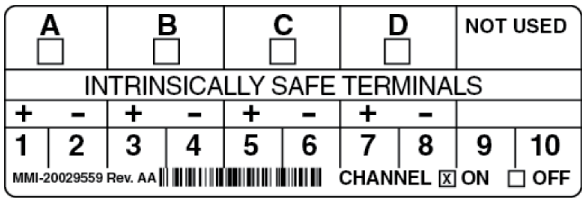

3. (Recommended) Record the channel and wiring configuration on the label provided inside the transmitter housing cover.

Figure 4-6: Channel and wiring configurations label

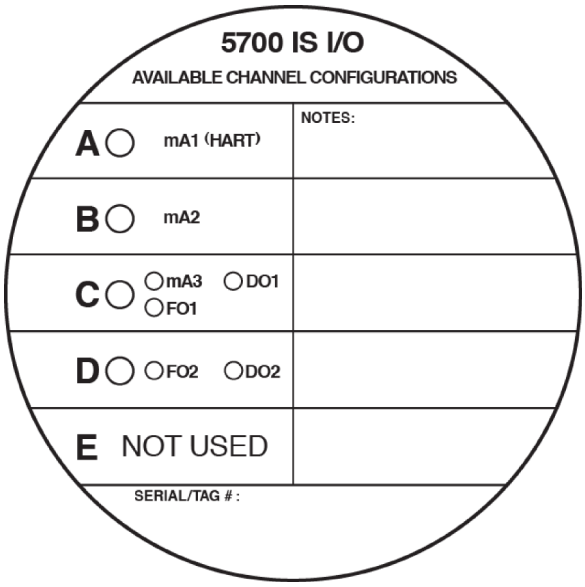

Related information

Available channels

4.7 Wire the Channel A mA/HART Output

Wire the mA/HART Output in explosion-proof, intrinsically safe, or nonhazardous installations.

WARNING
Meter installation and wiring should be performed only by suitably-trained personnel using the appropriate government and corporate safety standards.

Procedure

Wire to the appropriate output terminal and pins.

Figure 4-7: Channel A mA/HART output wiring

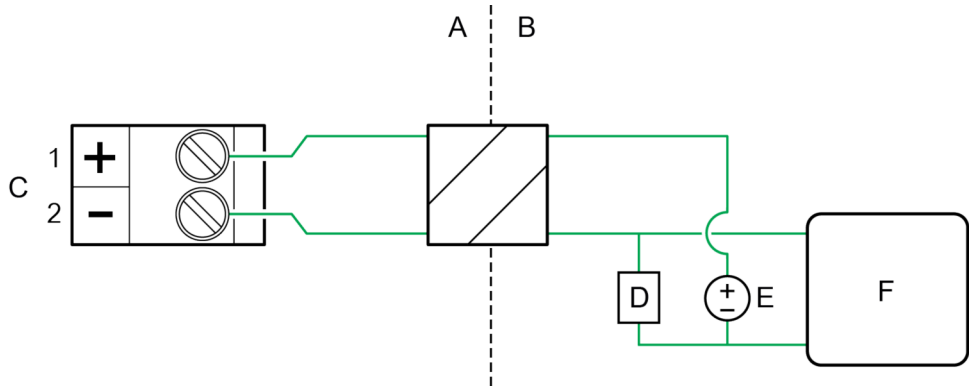

A. Hazardous area
B. Non-hazardous area
C. mA/HART output
D. 250–600 Ω resistance
E. 24V nominal
F. HART device

4.8 Wire the Channel B and C mA Output

Wire the mA Output in explosion-proof, intrinsically safe, or nonhazardous installations.

WARNING
Meter installation and wiring should be performed only by suitably-trained personnel using the appropriate government and corporate safety standards.

Procedure

Wire to the appropriate output terminal and pins.

Figure 4-8: Channel B and C mA Output wiring

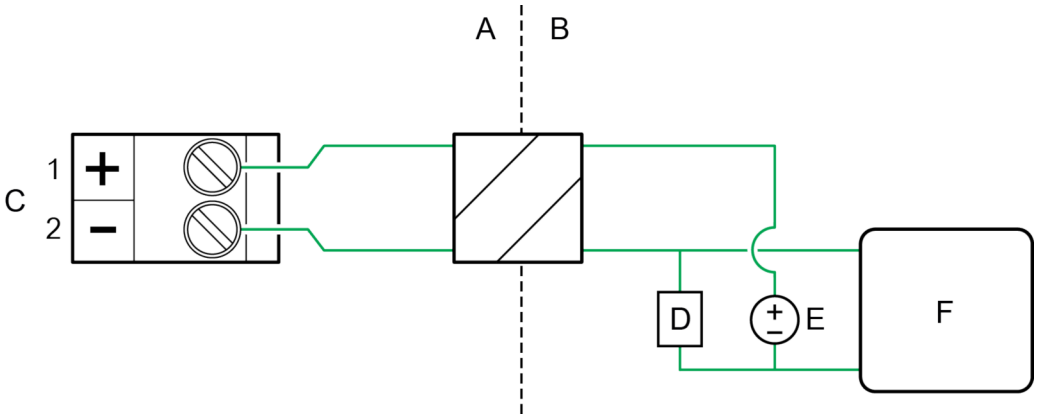

A. Hazardous area
B. Non-hazardous area
C. mA Output
D. 250–600 Ω resistance
E. 24V nominal
F. Input device

4.9 Wire the mA/SIL output

Refer to the *Coriolis Flow Meter with Micro Motion 5700 Transmitters Safety Manual for Safety Instrumented Systems (SIS)* for additional information regarding installation and commissioning that complies with SIS requirements.

4.10 Wire the mA/HART multidrop installation

Wire the mA/HART multidrop output in explosion-proof, intrinsically safe, or nonhazardous installations.

WARNING
Meter installation and wiring should be performed only by suitably-trained personnel using the appropriate government and corporate safety standards.

Procedure

See the following figure for information on wiring an mA/HART multidrop installation.

Figure 4-9: mA/HART multidrop wiring

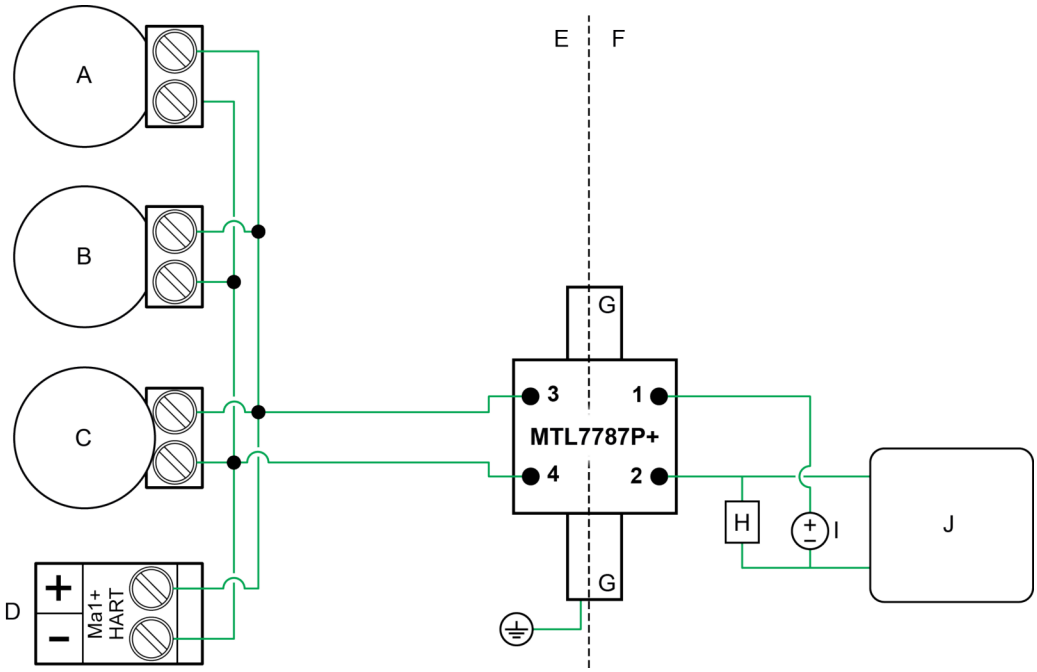

A. Input Device 1
B. Input Device 2
C. Input Device 3
D. Meter (mA+/HART output)
E. Hazardous area
F. Non-hazardous area
G. DIN rail
H. 250 Ω resistance
I. 24VDC
J. HART/Field Communicator

4.11 Wire the Frequency Output or the Discrete Output

Use this procedure to wire Channel C or D as the Frequency Output or the Discrete Output. Wire the FO or DO in explosion-proof, intrinsically safe, or nonhazardous installations.

WARNING
Meter installation and wiring should be performed only by suitably-trained personnel using the appropriate government and corporate safety standards.

Procedure

Wire to the appropriate output terminal and pins.

Figure 4-10: Frequency Output or Discrete Output wiring

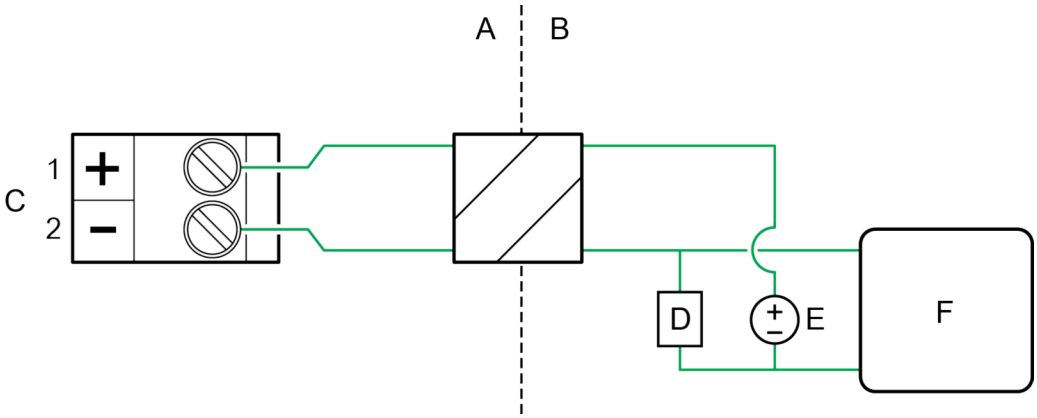

A. Hazardous area
B. Non-hazardous area
C. Frequency Output
D. 250–600 Ω resistance
E. 24V nominal
F. Input device

5 Wiring the power supply

You can install a user-supplied switch in the power supply line.

Important
For compliance with the Low Voltage Directive 2014/35/EU (European installations), verify that the transmitter is located in close proximity to a switch.

Procedure

1. Remove the wiring access cover.
2. Open the **Power** warning flap to locate the power terminals.

Figure 5-1: Location of power supply wiring terminals and equipment ground

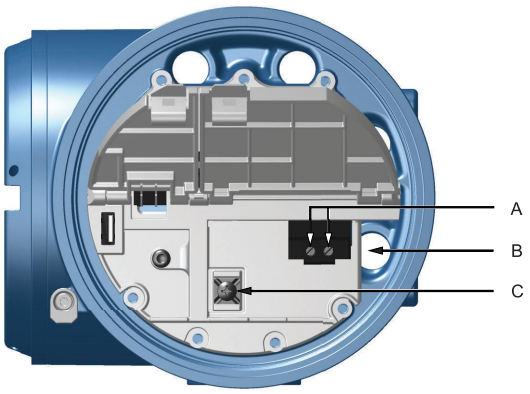

A. Power supply wiring terminals (+ and -)
B. Conduit connection for power supply wiring
C. Equipment ground

3. Connect the power supply wires.
   - For DC power: connect to terminals + and –.
   - For AC power: connect to terminals L/L1 (line) and N/L2 (neutral).

NOTICE
Do not use the conduit specified for power supply wires for input/output wiring (see Figure 5-1) to avoid pinched wires when the cover is closed.

4. Tighten the two screws holding the power connector in place.
5. Ground the power supply using the equipment ground, also under the **Power** warning flap.

6 Power up the transmitter

The transmitter must be powered up for all configuration and commissioning tasks or for process measurement.

Procedure

1. **WARNING**
   If the transmitter is in a hazardous area, do not remove the housing cover while the transmitter is powered up. Failure to follow these instructions can cause an explosion resulting in injury or death.

   Ensure that all transmitter and sensor covers and seals are closed.
2. Turn on the electrical power at the power supply.
   The transmitter will automatically perform diagnostic routines. The transmitter is self-switching and will automatically detect the supply voltage. When using DC power, a minimum of 1.5 amps of startup current is required. During this period, Alert 009 is active. The diagnostic routines should complete in approximately 30 seconds. The status LED will turn green and begin to flash when the startup diagnostics are complete. If the status LED exhibits different behavior, an alert is active.

Postrequisites

Although the sensor is ready to receive process fluid shortly after power-up, the electronics can take up to ten minutes to reach thermal equilibrium. Therefore, if this is the initial startup, or if power has been off long enough to allow components to reach ambient temperature, allow the electronics to warm up for approximately ten minutes before relying on process measurements. During this warm-up period, you may observe minor measurement instability or inaccuracy.

7 Configuring the transmitter with Guided Setup

At initial start-up of the transmitter, the guided configuration screen appears on the transmitter display. This tool guides you through basic configuration of the transmitter. The guided setup allows you to upload configuration files, set the transmitter display options, configure channels, and review sensor calibration data.

Procedure

To access the guided setup screen from the display main menu, go to: **Startup Tasks** → **Guided Setup**.

8 Using the display controls

The transmitter display interface includes a display (LCD panel) and four optical switches – left, up, down, and right arrow keys – used to access the display menus and navigate the display screens.

Procedure

1. To activate an optical switch, block the light by holding your thumb or finger in front of the opening.

   You can activate the optical switch through the lens. Do not remove the transmitter housing cover.

   Important
   The transmitter only detects one switch selection at a time. Be sure to place your thumb or finger directly over a single optical switch, and ensure no other switches are being obstructed.

   Figure 8-1: Proper finger positioning for activating an optical switch

2. Use the arrow indicators on the display screen to identify which optical switch to use to navigate the screen (see examples 1 and 2).

   Important
   When using the arrow keys, you must first activate the optical switch then release the same switch by removing your finger from the glass to move up, down, right, left or to make a selection. To enable auto-scroll when navigating up or down, activate the appropriate switch and continue to hold for one second. Release the switch when the desired selection is highlighted.

Figure 8-2: Example 1: Active arrow indicators on the transmitter display

Figure 8-3: Example 2: Active arrow indicators on the transmitter display

9 Available service port connection

Use the service port connection to download or upload data from/to the transmitter.

To access the service port, you can use commonly-available USB hardware, such as a USB drive, or USB cable.

WARNING
If the transmitter is in a hazardous area, do not remove the housing cover while the transmitter is powered up. Failure to follow these instructions can cause an explosion resulting in injury or death.

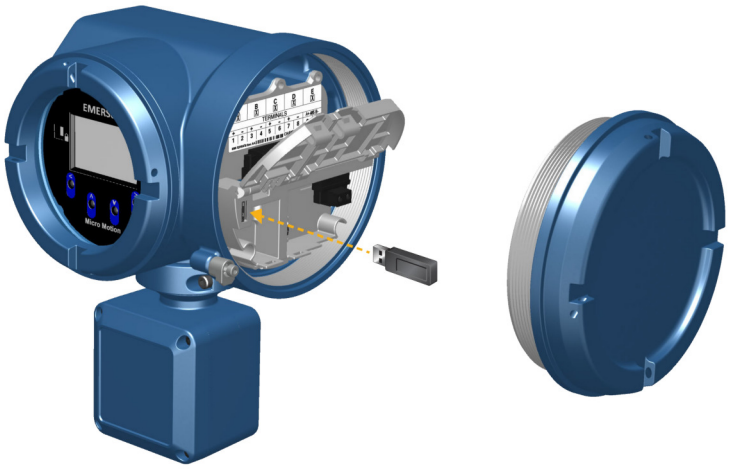

The service port connection is located under the **Service Port** warning flap at the wiring access points.

A Wire the Micro Motion 5700 to the Micro Motion 3100 transmitter

Prerequisites

- Set up the transmitter channel configuration to DO before wiring.
- Use active high and internal power.
- Use wire size 24 AWG (0,25 mm^2) to 16 AWG (1,5 mm^2).

Procedure

Tie the three ground pins of the 5700 together and then land on A14 of the 3100. The ground pins are even numbers: 4, 6, and 8.

Example (see the following figure): Use relay 1 (C) and 2 (B) with Channels B and C, then connect terminal 2 and 4 together from 5700 and land on A14.

Figure A-1: 5700 to 3100 - screw-type or solder-tail connector

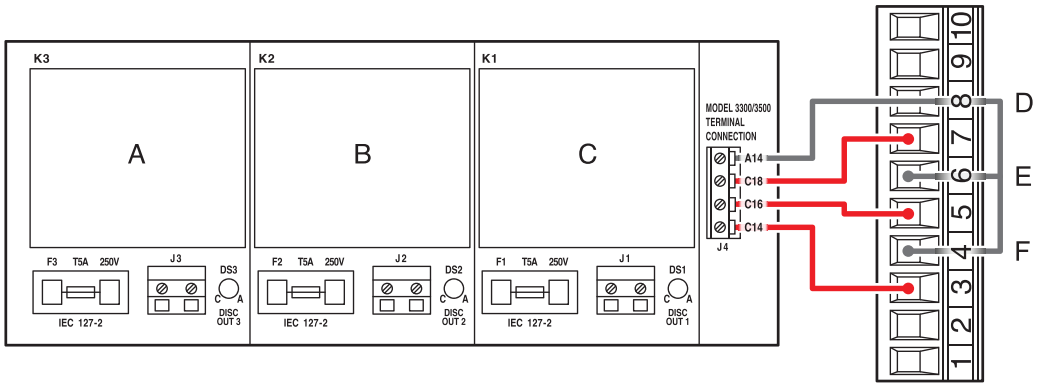

This graphic sets Channel B, configured as digital output (DO)1, to relay 1. If a different channel is assigned to DO, wire any DO to any relay.

A. *Relay 3, DO 3 pins 6 and 7, C18*
B. *Relay 2, DO 2 pins 5 and 6, C16*
C. *Relay 1, DO 1 pins 3 and 4, C14*
D. *Channel D*
E. *Channel C*
F. *Channel B*

MMI-20039473
Rev. AE
2022

For more information: **www.emerson.com**

©2022 Micro Motion, Inc. All rights reserved.

The Emerson logo is a trademark and service mark of Emerson Electric Co. Micro Motion, ELITE, ProLink, MVD and MVD Direct Connect marks are marks of one of the Emerson Automation Solutions family of companies. All other marks are property of their respective owners.

MICRO MOTION™

EMERSON™