Configuration and Use Manual
MMI-20039472, Rev AD
June 2021

Micro Motion™ 5700 Transmitters with Intrinsically Safe Outputs

Configuration and Use Manual

MICRO MOTION™

EMERSON™

Safety messages

Safety messages are provided throughout this manual to protect personnel and equipment. Read each safety message carefully before proceeding to the next step.

Safety and approval information

This Micro Motion product complies with all applicable European directives when properly installed in accordance with the instructions in this manual. Refer to the EU declaration of conformity for directives that apply to this product. The following are available: the EU declaration of conformity, with all applicable European directives, and the complete ATEX Installation Drawings and Instructions. In addition the IECEx Installation Instructions for installations outside of the European Union and the CSA Installation Instructions for installations in North America are available on the internet at www.emerson.com or through your local Micro Motion support center.

Information affixed to equipment that complies with the Pressure Equipment Directive, can be found on the internet at www.emerson.com. For hazardous installations in Europe, refer to standard EN 60079-14 if national standards do not apply.

Other information

Full product specifications can be found in the product data sheet. Troubleshooting information can be found in the configuration manual. Product data sheets and manuals are available from the Micro Motion web site at www.emerson.com.

Return policy

Follow Micro Motion procedures when returning equipment. These procedures ensure legal compliance with government transportation agencies and help provide a safe working environment for Micro Motion employees. Micro Motion will not accept your returned equipment if you fail to follow Micro Motion procedures.

Return procedures and forms are available on our web support site at www.emerson.com, or by phoning the Micro Motion Customer Service department.

Emerson Flow customer service

Email:

- Worldwide: flow.support@emerson.com
- Asia-Pacific: APflow.support@emerson.com

Telephone:

North and South America		Europe and Middle East		Asia Pacific	
United States	800-522-6277	U.K. and Ireland	0870 240 1978	Australia	800 158 727
Canada	+1 303-527-5200	The Netherlands	+31 (0) 70 413 6666	New Zealand	099 128 804
Mexico	+52 55 5809 5010	France	+33 (0) 800 917 901	India	800 440 1468
Argentina	+54 11 4809 2700	Germany	0800 182 5347	Pakistan	888 550 2682
Brazil	+55 15 3413 8000	Italy	+39 8008 77334	China	+86 21 2892 9000
Chile	+56 2 2928 4800	Central & Eastern	+41 (0) 41 7686 111	Japan	+81 3 5769 6803
Peru	+51 15190130	Russia/CIS	+7 495 995 9559	South Korea	+82 2 3438 4600
		Egypt	0800 000 0015	Singapore	+65 6 777 8211
		Oman	800 70101	Thailand	001 800 441 6426
		Qatar	431 0044	Malaysia	800 814 008
		Kuwait	663 299 01		
		South Africa	800 991 390		
		Saudi Arabia	800 844 9564		
		UAE	800 0444 0684		

Contents

Chapter 1 Before you begin 7
1.1 About this manual 7
1.2 Hazard messages 7
1.3 Related documents 8
1.4 Communications tools and protocols 8
Chapter 2 Quick start 9
2.1 Power up the transmitter 9
2.2 Check meter status 9
2.3 Commissioning wizards 10
2.4 Make a startup connection to the transmitter 10
2.5 Set the transmitter clock 10
2.6 View the licensed features 11
2.7 Set informational parameters 11
2.8 Characterize the meter (if required) 12
2.9 Verify mass flow measurement 15
2.10 Verify the zero 15
Chapter 3 Introduction to configuration and commissioning 17
3.1 Security and write protection 17
3.2 Work with configuration files 22
Chapter 4 Configure process measurement 29
4.1 Configure Sensor Flow Direction Arrow 29
4.2 Configure mass flow measurement 30
4.3 Configure volume flow measurement for liquid applications 35
4.4 Configure Gas Standard Volume (GSV) flow measurement 39
4.5 Configure density measurement 44
4.6 Configure temperature measurement 47
4.7 Configure Pressure Measurement Unit 48
4.8 Configure Velocity Measurement Unit 50
Chapter 5 Configure process measurement applications 51
5.1 Set up the API Referral application 51
5.2 Set up concentration measurement 62
5.3 Configure the batching application 80
Chapter 6 Configure advanced options for process measurement 87
6.1 Configure Response Time 87
6.2 Detect and report two-phase flow 87
6.3 Configure Flow Rate Switch 89

6.4 Configure events ... 90
6.5 Configure totalizers and inventories ... 92
6.6 Configure logging for totalizers and inventories ... 96
6.7 Configure Process Variable Fault Action ... 96

Chapter 7 Configure device options and preferences ... 101
7.1 Configure the transmitter display ... 101
7.2 Configure the transmitter's response to alerts ... 107
7.3 Control button sensitivity on the display ... 116

Chapter 8 Integrate the meter with the control system ... 117
8.1 Configure the transmitter channels ... 117
8.2 Configure an mA Output ... 118
8.3 Configure a Frequency Output ... 128
8.4 Configure a Discrete Output ... 133

Chapter 9 Configure digital communications ... 137
9.1 Configure HART communications ... 137

Chapter 10 Complete the configuration ... 145
10.1 Test or tune the system using sensor simulation ... 145
10.2 Enable or disable software write-protection ... 146

Chapter 11 Transmitter operation ... 149
11.1 View process and diagnostic variables ... 149
11.2 View and acknowledge status alerts ... 150
11.3 Read totalizer and inventory values ... 151
11.4 Start, stop, and reset totalizers and inventories ... 152

Chapter 12 Operation using the batcher ... 155
12.1 Run a batch ... 155
12.2 Perform AOC calibration ... 158

Chapter 13 Measurement support ... 161
13.1 Use Smart Meter Verification ... 161
13.2 Advanced Phase Measurement ... 167
13.3 Piecewise linearization (PWL) for calibrating gas meters ... 167
13.4 Zero the meter ... 168
13.5 Set up pressure compensation ... 170
13.6 Validate the meter ... 174
13.7 Perform a (standard) D1 and D2 density calibration ... 176
13.8 Adjust concentration measurement with Trim Offset ... 179
13.9 Adjust concentration measurement with Trim Slope and Trim Offset ... 180

Chapter 14 Maintenance ... 183
14.1 Install a new transmitter license ... 183
14.2 Upgrade the transmitter firmware ... 184

14.3 Reboot the transmitter....185
14.4 Battery replacement....186

Chapter 15 Log files, history files, and service files....187

15.1 Generate history files....187
15.2 Generate service files....193

Chapter 16 Troubleshooting.... 199

16.1 Status LED and device status....199
16.2 API Referral troubleshooting....199
16.3 Batch troubleshooting....200
16.4 Concentration measurement troubleshooting.... 201
16.5 Density measurement troubleshooting.... 202
16.6 Discrete Output troubleshooting....204
16.7 Flow measurement troubleshooting....205
16.8 Frequency Output troubleshooting.... 208
16.9 mA Output troubleshooting.... 209
16.10 Status alerts, causes, and recommendations.... 213
16.11 Temperature measurement problems....233
16.12 Velocity measurement problems....235
16.13 Check batch total against scale reading.... 237
16.14 Perform a core processor resistance test....238
16.15 Check the cutoffs....240
16.16 Check the direction parameters....240
16.17 Check the drive gain.... 240
16.18 Check for internal electrical problems....241
16.19 Check Frequency Output Fault Action 242
16.20 Check Frequency Output Mode 242
16.21 Check the scaling of the Frequency Output....242
16.22 Check grounding.... 243
16.23 Check HART burst mode....243
16.24 Check HART communications....243
16.25 Locate a device using the HART 7 Squawk feature....244
16.26 Perform loop tests.... 245
16.27 Check Lower Range Value and Upper Range Value 249
16.28 Check mA Output Fault Action 249
16.29 Trim mA Output.... 249
16.30 Check the pickoff voltage.... 250
16.31 Check power supply wiring.... 251
16.32 Check for radio frequency interference (RFI)....252
16.33 Check the sensor coils....252
16.34 Using sensor simulation for troubleshooting.... 254
16.35 Check sensor-to-transmitter wiring.... 254

16.36 Check for two-phase flow (slug flow) 255

Appendix A Using the transmitter display 257

A.1 Components of the transmitter display 257

A.2 Access and use the display menus 258

Appendix B Using ProLink III with the transmitter 263

B.1 Basic information about ProLink III 263

B.2 Connect with ProLink III 264

Appendix C Using a field communicator with the transmitter 273

C.1 Basic information about field communicators 273

C.2 Connect with a field communicator 274

Appendix D Channel combinations 279

D.1 Rules for channel combinations 279

D.2 Valid combinations for channel configuration 279

Appendix E Concentration measurement matrices, derived variables, and process variables 281

E.1 Standard matrices for the concentration measurement application 281

E.2 Derived variables and calculated process variables 282

Appendix F Environmental compliance 285

F.1 RoHS and WEEE 285

Appendix G Default values and ranges 287

1 Before you begin

1.1 About this manual

This manual helps you configure, commission, use, maintain, and troubleshoot Micro Motion 5700 transmitters with intrinsically safe outputs.

Important

This manual assumes that:

- The transmitter has been installed correctly and completely according to the instructions in the transmitter installation manual
- Users understand basic transmitter and sensor installation, configuration, and maintenance concepts and procedures

1.2 Hazard messages

This document uses the following criteria for hazard messages based on ANSI standards Z535.6-2011 (R2017).

DANGER

Serious injury or death will occur if a hazardous situation is not avoided.

WARNING

Serious injury or death could occur if a hazardous situation is not avoided.

CAUTION

Minor or moderate injury will or could occur if a hazardous situation is not avoided.

NOTICE

Data loss, property damage, hardware damage, or software damage can occur if a situation is not avoided. There is no credible risk of physical injury.

Physical access

NOTICE

Unauthorized personnel can potentially cause significant damage and/or misconfiguration of end users' equipment. Protect against all intentional or unintentional unauthorized use.

Physical security is an important part of any security program and fundamental to protecting your system. Restrict physical access to protect users' assets. This is true for all systems used within the facility.

1.3 Related documents

You can find all product documentation on the product documentation DVD shipped with the product or at www.emerson.com.

See any of the following documents for more information:

- *Micro Motion 5700 Product Data Sheet*
- *Micro Motion 5700 Transmitters with Intrinsically Safe Outputs: Installation Manual*
- *Coriolis Flow Meter with Micro Motion Model 5700 Transmitters Safety Manual for Safety Instrumented Systems (SIS)*
- *Replacing the Junction Box for the 4200 Transmitter and the 5700 Transmitter*
- *Replacing the Sensor Cable for the 4200 Transmitter and the 5700 Transmitter*
- Sensor installation manual

1.4 Communications tools and protocols

You can use several different communications tools and protocols to interface with the transmitter, use different tools in different locations, or use different tools for different tasks.

Tool	Supported protocols
Display	Not applicable
ProLink™ III	• HART®/Bell 202 • Service port
Field communicator	HART/Bell 202

For information about how to use the communication tools, see the appendices in this manual.

Tip
You may be able to use other communications tools, such as AMS™ Suite: Intelligent Device Manager, or the Smart Wireless THUM™ Adapter. Use of AMS or the Smart Wireless THUM Adapter is not discussed in this manual. For more information on the Smart Wireless THUM Adapter, refer to the documentation available at www.emerson.com.

2 Quick start

2.1 Power up the transmitter

The transmitter must be powered up for all configuration and commissioning tasks, or for process measurement.

Procedure

1. Follow appropriate procedures to ensure that a new device in the control system does not interfere with existing measurement and control loops.
2. Verify that the cables are connected to the transmitter as described in the installation manual.
3. Verify that all transmitter and sensor covers and seals are closed.

   WARNING
   To prevent ignition of flammable or combustible atmospheres, ensure that all covers and seals are tightly closed. For hazardous area installations, applying power while housing covers are removed or loose can cause an explosion resulting in injury or death.

4. Turn on the electrical power at the power supply.
   The transmitter will automatically perform diagnostic routines. During this period, the `Transmitter Initializing` alert is active. The diagnostic routines should complete in approximately 30 seconds.

Postrequisites

Although the sensor is ready to receive process fluid shortly after power-up, the electronics can take up to 10 minutes to reach thermal equilibrium. Therefore, if this is the initial startup, or if power has been off long enough to allow components to reach ambient temperature, allow the electronics to warm up for approximately 10 minutes before relying on process measurements. During this warm-up period, you may observe minor measurement instability or inaccuracy.

2.2 Check meter status

Check the meter for any error conditions that require user action or that affect measurement accuracy.

Procedure

1. Wait approximately 10 seconds for the power-up sequence to complete.
   Immediately after power-up, the transmitter runs through diagnostic routines and checks for error conditions. During the power-up sequence, the `Transmitter Initializing` alert is active. This alert should clear automatically when the power-up sequence is complete.
2. Check the status LED on the transmitter.

   Table 2-1: Status LED and device status

Status LED condition	Device status
Solid green	No alerts are active.
Solid yellow	One or more alerts are active with **Alert Severity** = Out of Specification, Maintenance Required, or Function Check.

Table 2-1: Status LED and device status *(continued)*

Status LED condition	Device status
Solid red	One or more alerts are active with **Alert Severity** = Failure.
Flashing yellow (1 Hz)	The `Function Check in Progress` alert is active.

2.3 Commissioning wizards

The transmitter menu includes a *Guided Setup* to help you move quickly through the most common configuration parameters. ProLink III also provides a commissioning wizard.

By default, when the transmitter starts up, the Guided Setup menu is offered. You can choose to use it or not. You can also choose whether or not Guided Setup is displayed automatically.

- To enter Guided Setup upon transmitter startup, choose **Yes** at the prompt.
- To enter Guided Setup after transmitter startup, choose **Menu** → **Startup Tasks**.
- To control the automatic display of Guided Setup, choose **Menu** → **Configuration** → **Guided Setup**.

For information on the ProLink III commissioning wizard, see the *Micro Motion ProLink III with ProcessViz Software User Manual*.

As the commissioning wizards are self guided, they are not documented in detail.

2.4 Make a startup connection to the transmitter

For all configuration tools except the display, you must have an active connection to the transmitter to configure the transmitter.

Procedure

Identify the connection type to use, and follow the instructions for that connection type in the appropriate appendix.

Communications tool	Connection type to use	Instructions
ProLink III	Service port	Using ProLink III with the transmitter
Field communicator	HART	Using a field communicator with the transmitter

2.5 Set the transmitter clock

Display	**Menu** → **Configuration** → **Time/Date/Tag**
ProLink III	**Device Tools** → **Configuration** → **Transmitter Clock**
Field communicator	**Configure** → **Manual Setup** → **Clock**

The transmitter clock provides timestamp data for alerts, service logs, history logs, and all other timers and dates in the system. You can set the clock for your local time or for any standard time you want to use.

Tip
You may find it convenient to set all of your transmitter clocks to the same time, even if the transmitters are in different time zones.

Procedure

1. Select the time zone that you want to use.
2. If you need a custom time zone, select **Special Time Zone** and enter your time zone as a difference from UTC (Coordinated Universal Time).
3. Set the time appropriately for the selected time zone.

   Tip
   The transmitter does not adjust for Daylight Savings Time. If you observe Daylight Savings Time, you must reset the transmitter clock manually.

4. Set the month, day, and year.

   The transmitter tracks the year and automatically adds a day for leap years.

2.6 View the licensed features

Display	**Menu → About → Licenses → Licensed Features**
ProLink III	**Device Tools → Device Information → Licensed Features**
Field communicator	**Overview → Device Information → Licenses**

The transmitter license controls the features that are enabled on the transmitter, including both software applications and output channels. You can view the licensed features to ensure that the transmitter was ordered with the required features.

Licensed features are purchased and available for permanent use. The options model code represents the licensed features.

A trial license allows you to explore features before purchasing. The trial license enables the specified features for a limited number of days. This number is displayed for reference. At the end of this period, the feature will no longer be available.

To purchase additional features or request a trial license, document the Unique ID Number and current license key from your transmitter and contact customer service. To enable the additional features or trial license, you will need to install the new license on the transmitter.

2.7 Set informational parameters

Display	**Menu → Configuration → Device Information**
ProLink III	**Device Tools → Configuration → Informational Parameters**
Field communicator	**Configure → Manual Setup → Device**

You can set several parameters that identify or describe the transmitter and sensor. These parameters are not used in processing and are not required.

Procedure

1. Set informational parameters for the transmitter.
   a) Set **Transmitter Serial Number** to the serial number of your transmitter.

      The transmitter serial number is provided on the metal tag that is attached to the transmitter housing.

   b) Set **Descriptor** to any desired description of this transmitter or measurement point.

   c) Set **Message** to any desired message.

   d) Verify that **Model Code (Base)** is set to the base model code of the transmitter.

      The base model code completely describes your transmitter, except for the features that can be licensed independently. The base model code is set at the factory.

   e) Set **Model Code (Options)** to the options model code of the transmitter.

      The options model code describes the independent features that have been licensed for this transmitter. The original options model code is set at the factory. If you license additional options for this transmitter, Micro Motion will supply an updated options model code.

      For a field communicator, configuring model code options is not available for this release.

2. Set informational parameters for the sensor.
   a) Set **Sensor Serial Number** to the serial number of the sensor connected to this transmitter.

      The sensor serial number is provided on the metal tag that is attached to the sensor case.

   b) Set **Sensor Material** to the material used for the sensor.

   c) Set **Sensor Liner** to the material used for the sensor liner, if any.

   d) Set **Flange Type** to the type of flange that was used to install the sensor.

   Do not set **Sensor Type**. **Sensor Type** is set or derived during characterization.

2.8 Characterize the meter (if required)

Display	**Menu → Configuration → Sensor Parameters**
ProLink III	**Device Tools → Calibration Data**
Field communicator	**Configure → Manual Setup → Characterization**

Characterizing the meter adjusts your transmitter to match the unique traits of the sensor it is paired with. The characterization parameters (also called calibration parameters) describe the sensor's sensitivity to flow, density, and temperature. Depending on your sensor type, different parameters are required.

Values for your sensor are provided on the sensor tag or the calibration certificate.

- If your transmitter was ordered with a sensor, it was characterized at the factory. However, you should still verify the characterization parameters.
- Perform a characterization whenever you replace a core processor.

Procedure

1. Optional: Specify **Sensor Type**.
   - Straight Tube (T-Series sensors)
   - Curved Tube (all sensors except T-Series)

   Note
   Unlike earlier transmitters, the 5700 derives **Sensor Type** from the user-specified values for FCF and K1 in combination with an internal ID.

2. Set the flow calibration factor: **FCF** (also called **Flow Cal** or **Flow Calibration Factor**). Be sure to include all decimal points.
3. Set the density characterization parameters: **D1**, **D2**, **TC**, **K1**, **K2**, and **FD**. (**TC** is sometimes shown as **DT**.)
4. Apply the changes as required by the tool you are using.

   The transmitter identifies your sensor type, and characterization parameters are adjusted as required:
   - If **Sensor Type** changed from Curved Tube to Straight Tube, five characterization parameters are added to the list.
   - If **Sensor Type** changed from Straight Tube to Curved Tube, five characterization parameters are removed from the list.
   - If **Sensor Type** did not change, the list of characterization parameters does not change.
5. T-Series sensors only: Set the additional characterization parameters listed below.

Characterization parameter type	Parameters
Flow	FTG, FFQ
Density	DTG, DFQ1, DFQ2

2.8.1 Sample sensor tags

Figure 2-1: Tag on newer curved-tube sensors (all sensors except T-Series)

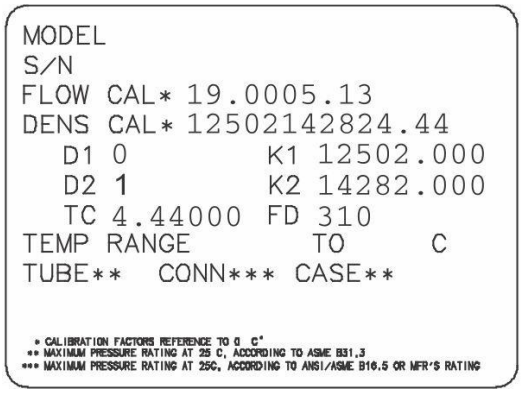

2.8.2 Flow calibration parameters (FCF, FT)

Two separate values are used to describe flow calibration: a 6-character FCF value and a 4-character FT value. They are provided on the sensor tag.

Both values contain decimal points. During characterization, these are entered as a single 10-character string. The 10-character string is called either **Flowcal** or **FCF**.

If your sensor tag shows the **FCF** and the **FT** values separately and you need to enter a single value, concatenate the two values to form the single parameter value, retaining both decimal points.

Concatenating FCF and FT

```
FCF = x.xxxx FT = y.yy Flow calibration parameter: x.xxxxy.yy
```

2.8.3 Density calibration parameters (D1, D2, K1, K2, FD, DT, TC)

Density calibration parameters are typically on the sensor tag and the calibration certificate.

If your sensor tag does not show a D1 or D2 value:

- For **D1**, enter the Dens A or **D1** value from the calibration certificate. This value is the line-condition density of the low-density calibration fluid. Micro Motion uses air. If you cannot find a Dens A or **D1** value, enter `0.001` g/cm^3.
- For **D2**, enter the Dens B or **D2** value from the calibration certificate. This value is the line-condition density of the high-density calibration fluid. Micro Motion uses water. If you cannot find a Dens B or **D2** value, enter `0.998` g/cm^3 .

If your sensor tag does not show a K1 or K2 value:

- For **K1**, enter the first five digits of the density calibration factor. In this sample tag, this value is shown as 12500.
- For **K2**, enter the second five digits of the density calibration factor. In this sample tag, this value is shown as 14286.

Figure 2-2: K1, K2, and TC values in the density calibration factor

```
Sensor              S/N
Meter Type
Meter Factor
Flow Cal Factor 19.0005.13
Dens Cal Factor 12500142864.44
Cal Factor Ref to 0°C
TEMP                 °C
TUBE*               CONN**

*MAX. PRESSURE RATING AT 25°C, ACCORDING TO ASME B31.3.
*MAX. PRESSURE RATING AT 25°C, ACCORDING TO ANSI/ASME B16.5 OR MFR'S RATING.
```

If your sensor does not show an **FD** value, contact customer service.

If your sensor tag does not show a **DT** or **TC** value, enter the last four characters of the density calibration factor. In the sample tag shown above, the value is shown as 4.44.

Do not confuse the **Meter Factor** line on the pictured sensor tag with any meter factor settings discussed in this manual.

2.9 Verify mass flow measurement

Check to see that the mass flow rate reported by the transmitter is accurate. You can use any available method.

Procedure

- Read the value for **Mass Flow Rate** on the transmitter display.

  Menu → Operations → Process Variable Values
- Connect to the transmitter with ProLink III and read the value for **Mass Flow Rate** in the ***Process Variables*** panel.
- Connect to the transmitter with a field communicator and read the value for **Mass Flow Rate**.

  Online → Overview → Mass Flow Rate

Postrequisites

If the reported mass flow rate is not accurate:

- Check the characterization parameters.
- Review the troubleshooting suggestions for flow measurement issues.

2.10 Verify the zero

Display	**Menu → Service Tools → Verification & Calibration → Meter Zero → Zero Verification**
ProLink III	**Device Tools → Calibration → Smart Zero Verification and Calibration → Verify Zero**
Field communicator	**Service Tools → Maintenance → Calibration → Zero Calibration → Perform Zero Verify**

Verifying the zero helps you determine if the stored zero value is appropriate to your installation, or if a field zero can improve measurement accuracy.

Important

In most cases, the factory zero is more accurate than the field zero. Do not zero the meter unless one of the following is true:

- The zero is required by site procedures.
- The stored zero value fails the zero verification procedure.

Do not verify the zero or zero the meter if a high-severity alert is active. Correct the problem, then verify the zero or zero the meter. You may verify the zero or zero the meter if a low-severity alert is active.

Procedure

1. Prepare the meter:
   a) Allow the meter to warm up for at least 20 minutes after applying power.
   b) Run the process fluid through the sensor until the sensor temperature reaches the normal process operating temperature.
   c) Stop flow through the sensor by shutting the downstream valve, and then the upstream valve if available.
   d) Verify that the sensor is blocked in, that flow has stopped, and that the sensor is completely full of process fluid.
2. Start the zero verification procedure, and wait until it completes.
3. If the zero verification procedure fails:
   a) Confirm that the sensor is completely blocked in, that flow has stopped, and that the sensor is completely full of process fluid.
   b) Verify that the process fluid is not flashing or condensing, and that it does not contain particles that can settle out.
   c) Repeat the zero verification procedure.
   d) If it fails again, zero the meter.

Postrequisites

Restore normal flow through the sensor by opening the valves.

Related information

Zero the meter

3 Introduction to configuration and commissioning

3.1 Security and write protection

The transmitter has several features that can help to protect it against intentional or unintentional access and configuration changes.

- When locked, the mechanical lock switch on the front of the display prevents any configuration changes to the transmitter from any local or remote configuration tool. A transmitter without a display does not have a lock switch.
- When enabled, the software setting **Write Protection** prevents any configuration changes. The setting can only be enabled if the transmitter does not have a display.
- If the Universal Service Port (USP) is disabled, the port cannot be used by any service tool to communicate with or make changes to the transmitter.
- When used, the **HART Lock** prevents any changes by any other HART master.
- When enabled, **Security** prevents any configuration changes being made from the display unless the appropriate password is entered.

3.1.1 Universal Service Port security

This transmitter is equipped with a Universal Service Port that works with USB type A connections, including compatible flash drives. There are multiple levels of security built into the transmitter's service port that you can configure according to your needs and security standards.

The service port offers the following features that enhance interface security:

- The service port is inaccessible without physical access to the transmitter and requires removal of the terminal cover
- The service port can be disabled from the transmitter through software
- The transmitter has a non-traditional operating system that is not designed to execute programs or run scripts
- The display can be password protected to limit access to the USB file menu
- Overall transmitter security switches such as the lock switch or write-protection disallows configuration changes from all interfaces including the Universal Service Port

This transmitter:

- Was designed to be implemented in an industrial automation control system (Level 1 and Level 2 of the Purdue Reference Architecture Model), with defense in depth security controls
- Is not intended to be directly connected to an enterprise or to an internet-facing network without a compensating control in place

3.1.2 Lock or unlock the transmitter

If the transmitter has a display, a mechanical switch on the display can be used to lock or unlock the transmitter. When locked, no configuration changes can be made using any configuration tool.

Figure 3-1: Lock switch on transmitter display

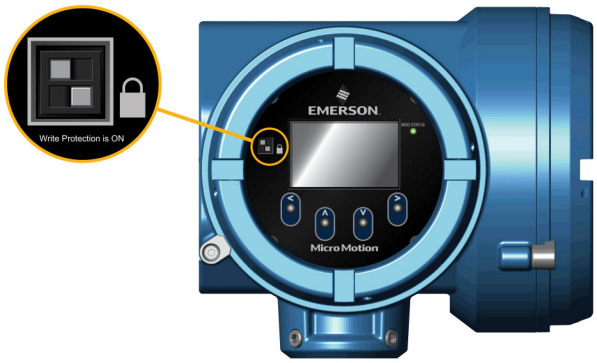

You can determine whether you need to lock or unlock the transmitter by looking at the switch.

- If the switch is in the right position, the transmitter is locked.
- If the switch is in the left position, the transmitter is unlocked.

Note
The top switch is reserved for future use.

Procedure

1. **WARNING**
   If the transmitter is in a hazardous area, do not remove the housing cover while the transmitter is powered up. Failure to follow these instructions can cause an explosion resulting in injury or death.

   If you are in a hazardous area, power down the transmitter.
2. Remove the transmitter housing cover.

Figure 3-2: Removing the transmitter housing cover

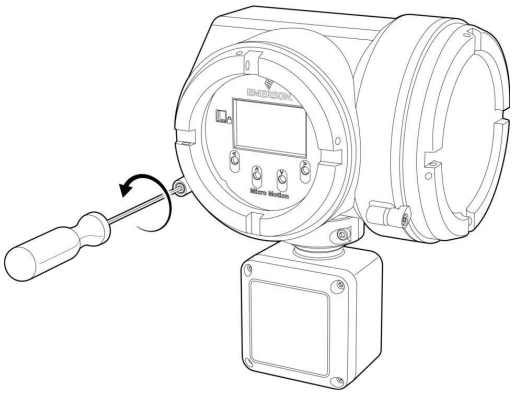

3. Using a fine-pointed tool, move the switch to the desired position.
4. Replace the transmitter housing cover.
5. If necessary, power up the transmitter.

3.1.3 Enable or disable the service port

Display	**Menu → Configuration → Security → Service Port**
ProLink III	Not available
Field communicator	**Configure → Manual Setup → Security → Enable/Disable Service Port**

The service port is enabled by default, so you can use it for transferring files or connect to it with ProLink III. If you want to completely prevent it from being used, you can disable it.

Note
Enabling or disabling the service port will not take effect until power has been cycled to the transmitter.

WARNING
Do not use the service port if the transmitter is in a hazardous area because using the service port means that you must open the transmitter wiring compartment. Opening the wiring compartment in a hazardous area while the transmitter is powered up can cause an explosion resulting in injury or death.

3.1.4 Set the HART lock

If you plan to use a HART connection to configure the device, you can lock out all other HART masters. If you do this, other HART masters will be able to read data from the device but will not be able to write data to the device.

Restriction
- This feature is available only when you are using a field communicator or AMS.
- This feature is available only with a HART 7 host.

Procedure

1. Choose **Configure → Manual Setup → Security → Lock/Unlock Device**.
2. If you are locking the meter, set **Lock Option** as desired.

Option	Description
Permanent	Only the current HART master can make changes to the device. The device will remain locked until manually unlocked by a HART master. The HART master can also change **Lock Option** to Temporary.
Temporary	Only the current HART master can make changes to the device. The device will remain locked until manually unlocked by a HART master, or a power-cycle or device reset is performed. The HART master can also change **Lock Option** to Permanent.

Option	Description
Lock All	No HART masters are allowed to make changes to the configuration. Before changing **Lock Option** to Permanent or Temporary, the device must be unlocked. Any HART master can be used to unlock the device.

Postrequisites

To avoid future confusion or difficulties, ensure that the device is unlocked after you have completed your tasks.

3.1.5 Enable or disable software write-protection

Display	Use the mechanical switch on the display.
ProLink III	**Device Tools → Configuration → Write-Protection**
Field communicator	**Configure → Manual Setup → Security → Lock/Unlock Device**

When enabled, **Write-Protection** prevents changes to the transmitter configuration. You can perform all other functions, and you can view the transmitter configuration parameters.

Note
The write protection setting via software methods (such as ProLink III) is available only on transmitters without a display.
For transmitters with a display, write protection is available only using the lock switch on the display. See Lock or unlock the transmitter.

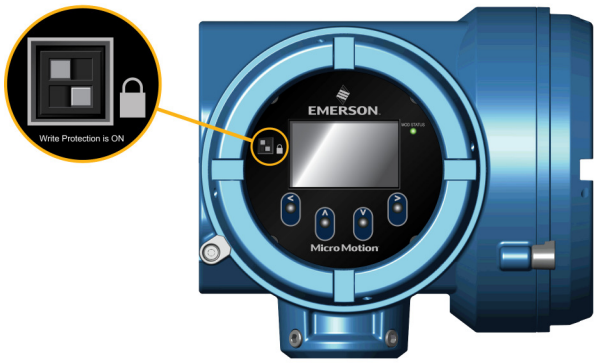

Write-protecting the transmitter primarily prevents accidental changes to configuration, not intentional changes. Any user who can make changes to the configuration can disable write protection.

3.1.6 Configure security for the display

Display	**Menu → Configuration → Security → Display Security**
ProLink III	**Device Tools → Configuration → Transmitter Display → Display Security**
Field communicator	**Configure → Manual Setup → Display → Display Menus**

When using the display, you can require users to enter a password to do any of the following tasks:

- Enter the main menu
- Change a parameter
- Access alert data through the display
- Start, stop, or reset totalizers or inventories via the context menu

The display password can be the same or different from the totalizer/inventory context menu control password. If different, the display password is used to reset, start, and stop totalizers or inventories using **Menu** → **Operations** → **Totalizers**.

Procedure

1. Configure **Password Required** as desired.

Option	Description
At Write	When an user chooses an action that leads to a configuration change, they are prompted to enter the display password.
Enter Menu	When the menu is selected from the process variable screen, the display password will be immediately required if **Password Required** is set.
Never (default)	When a user chooses an action that leads to a configuration change, they are prompted to activate ⇦⇧⇩⇨. This is designed to protect against accidental changes to configuration. It is not a security measure.

2. If the At Write or Enter Menu option was selected, enable or disable alert security as desired.

Option	Description
Enabled	If an alert is active, the alert symbol ⓘ is shown in the upper right corner of the display but the alert banner is not displayed. If the operator attempts to enter the alert menu, they are prompted to enter the display password.
Disabled	If an alert is active, the alert symbol ⓘ is shown in the upper right corner of the display and the alert banner is displayed automatically. No password or confirmation is required to enter the alert menu.

Restriction

You cannot set Password Required to Never and enable alert security.

- If you did not enable **Password Required**, alert security is disabled and cannot be enabled.
- Alert security is disabled automatically if you set **Password Required** to Never after:
  - **Password Required** is initially set to either At Write or Enter Menu
  - Alert security is enabled

3. If **Password Required** has been set to At Write or Enter Menu, you will be prompted to enter the desired password.
   - Default: AAAA
   - Range: Any four alphanumeric characters
   - **Password Required** must be set to At Write or Enter Menu to enable the totalizer/inventory control context menu password option.

   Important
   If you enable **Password Required** but you do not change the display password, the transmitter will post a configuration alert.

4. Configure **Main Menu Available** as desired.

Option	Description
Enabled	The local display **Menu** option from the process variable screen will be accessible.
Disabled	The local display **Menu** option from the process variable screen will not be accessible.

   Important
   Once **Main Menu Available** has been disabled, you cannot enable it from the local display. Use another configuration tool, such as ProLink III, to re-enable main menu access from the local display.

3.2 Work with configuration files

You can save the current transmitter configuration in two forms: a backup file and a replication file. You can save the configuration to the SD card on your transmitter or to a USB drive.

Tip
You can use a saved configuration file to change the nature of the transmitter quickly. This might be convenient if the transmitter is used for different applications or different process fluids.

You can load a configuration file to the transmitter's working memory or to the transmitter's SD card. You can load either a backup file or a replication file.

Backup files Contain all parameters. They are used to restore the current device if required. The `.spare` extension is used to identify backup files.

Replication files Contain all parameters except the device-specific parameters, e.g., calibration factors or meter factors. They are used to replicate the transmitter configuration to other devices. The `.xfer` extension is used to identify replication files.

3.2.1 Save a configuration file using the display

Prerequisites

If you are planning to use the USB drive, the service port must be enabled. It is enabled by default. However, if you need to enable it, choose **Menu** → **Configuration** → **Security** and set **Service Port** to On.

Procedure

- To save the current configuration to the transmitter's SD card as a backup file:
  a) Choose **Menu** → **Configuration** → **Save/Restore Config** → **Save Config to Memory**.
  b) Enter the name for this configuration file.

  The configuration file is saved to the transmitter's SD card as `yourname.spare`.
- To save the current configuration to a USB drive, as either a backup file or a replication file:
  a) **WARNING**
  If the transmitter is in a hazardous area, do not remove the housing cover while the transmitter is powered up. Failure to follow these instructions can cause an explosion resulting in injury or death.

     Open the wiring compartment on the transmitter and insert a USB drive into the service port.
  b) Choose **Menu** → **USB Options** → **Transmitter –> USB Drive** → **Save Active Config to USB Drive**.
  c) Choose Backup or Replicate.
  d) Enter the name for this configuration file.

  The configuration file is saved to the USB drive as `yourname.spare` or `yourname.xfer`.
- To copy a configuration file from the transmitter's SD card to the USB drive:
  a) **WARNING**
  If the transmitter is in a hazardous area, do not remove the housing cover while the transmitter is powered up. Failure to follow these instructions can cause an explosion resulting in injury or death.

     Open the wiring compartment on the transmitter and insert a USB drive into the service port.
  b) Choose **Menu** → **USB Options** → **Transmitter –> USB Drive** → **Transfer Config File to USB Drive**.
  c) Choose Backup or Replicate.
  d) Select the file that you want to transfer.

  The configuration file is copied to the USB drive, using its existing name.

3.2.2 Save a configuration file using ProLink III

Note
When you use ProLink III format for configuration files, you can specify configuration parameters individually or by groups. Therefore, you can use this format for both backup and replication.

Procedure

- To save the current configuration to the transmitter's SD card:
  a) Choose **Device Tools** → **Configuration Transfer** → **Save Configuration**.
  b) Select On my 5700 Device Internal Memory and select **Next**.
  c) Select **Save**.

d) Enter the name for this configuration file.

e) Set the file type.

— To save a backup file, set the file type to Backup.

— To save a replication file, set the file type to Transfer.

f) Select **Save**.

The configuration file is saved to the transmitter's SD card as `yourname.spare` or `yourname.xfer`.

- To save the current configuration to your PC, in 5700 format:

a) Choose **Device Tools** → **Configuration Transfer** → **Save Configuration**.

b) Select On my computer in 5700 device file format and select **Next**.

c) Select **Save**.

d) Browse to the desired location, then enter the name for this configuration file.

e) Set the file type.

— To save a backup file, set the file type to Backup.

— To save a replication file, set the file type to Transfer.

f) Select **Save**.

The configuration file is saved to the specified location as `yourname.spare` or `yourname.xfer`.

- To save the current configuration to your PC, in ProLink III format:

a) Choose **Device Tools** → **Configuration Transfer** → **Save Configuration**.

b) Select On my computer in ProLink III file format and click **Next**.

c) Select **Save**.

d) Select the configuration parameters to be included in this file.

— To save a backup file, select all parameters.

— To save a replication file, select all parameters except device-specific parameters.

e) Select Save.

f) Browse to the desired location, then enter the name for this configuration file.

g) Set the file type to ProLink configuration file.

h) Select Start Save.

The configuration file is saved to the specified location as `yourname.pcfg`.

3.2.3 Load a configuration file using the display

Prerequisites

You must have a backup file or a replication file available for use.

If you are planning to use the USB drive, the service port must be enabled. It is enabled by default. However, if you need to enable it, choose **Menu** → **Configuration** → **Security** and set **Service Port** to On.

Procedure

- To load either a backup file or a replication file from the transmitter's SD card:
  a) Choose **Menu** → **Configuration** → **Save/Restore Config** → **Restore Config from Memory**.
  b) Select **Backup** or **Replicate**.
  c) Select the file that you want to load.

  The file is loaded to working memory and becomes active immediately.
- To load a either a backup file or a replication file from a USB drive:
  a) **WARNING**
  If the transmitter is in a hazardous area, do not remove the housing cover while the transmitter is powered up. Failure to follow these instructions can cause an explosion resulting in injury or death.

  Open the wiring compartment on the transmitter and insert the USB drive containing the backup file or replication file into the service port.
  b) Choose **Menu** → **USB Options** → **USB Drive –> Transmitter** → **Upload Configuration File**.
  c) Select **Backup** or **Replicate**.
  d) Select the file that you want to load.
  e) Choose Yes or No when prompted to apply the settings.
     — Yes: The file is loaded to working memory and becomes active immediately.
     — No: The file is loaded to the transmitter's SD card but not to working memory. You can load it from the SD card to working memory at a later time.

3.2.4 Load a configuration file using ProLink III

You can load a configuration file to the transmitter's working memory. You can load a backup file or a replication file. Two PC file formats are supported: the 5700 format and the ProLink III format.

Note
When you use ProLink III format for configuration files, you can specify configuration parameters individually or by groups. Therefore, you can use this format for both backup and replication.

Procedure

- To load a backup file or replication file from the transmitter's SD card:
  a) Choose **Device Tools** → **Configuration Transfer** → **Load Configuration**.
  b) Select On my 5700 Device Internal Memory and select **Next**.
  c) Select Restore.

d) Set the file type.
   — To load a backup file, set the file type to Backup.
   — To load a replication file, set the file type to Transfer.

e) Select the file that you want to load and select **Load**.

The parameters are written to working memory, and the new settings become effectively immediately.

- To load a backup file or replication file in 5700 format from the PC:
  a) Choose **Device Tools** → **Configuration Transfer** → **Load Configuration**.
  b) Select On my computer in 5700 device file format and select **Next**.
  c) Select Restore.
  d) Set the file type.
     — To load a backup file, set the file type to Backup.
     — To load a replication file, set the file type to Transfer.
  e) Navigate to the file you want to load, and select it.

  The parameters are written to working memory, and the new settings become effectively immediately.
- To load a file in ProLink III format from the PC:
  a) Choose **Device Tools** → **Configuration Transfer** → **Load Configuration**.
  b) Select On my computer in ProLink III file format and select **Next**.
  c) Select the parameters that you want to load.
  d) Select Load.
  e) Set the file type to Configuration file.
  f) Navigate to the file you want to load, and select it.
  g) Select Start Load.

  The parameters are written to working memory, and the new settings become effectively immediately.

3.2.5 Restore the factory configuration

Display	**Menu → Configuration → Save/Restore Configuration → Restore Config from Memory**
ProLink III	**Device Tools → Configuration Transfer → Restore Factory Configuration**
Field communicator	**Service Tools → Maintenance → Reset/Restore → Restore Factory Configuration**

A file containing the factory configuration is always saved in the transmitter's internal memory, and is available for use.

This action is typically used for error recovery or for repurposing a transmitter.

If you restore the factory configuration, the real-time clock, the audit trail, the historian, and other logs are not reset.

3.2.6 Replicate a transmitter configuration

Replicating a transmitter configuration is a fast method to set up similar or identical measurement points.

Procedure

1. Configure a transmitter and verify its operation and performance.
2. Use any available method to save a replication file from that transmitter.
3. Use any available method to load the replication file to another transmitter.
4. At the replicated transmitter, set device-specific parameters and perform device-specific procedures:
   a) Set the clock.
   b) Set the tag, long tag, HART address, and related parameters.
   c) Characterize the transmitter.
   d) Perform zero validation and take any recommended actions.
   e) Perform loop tests and take any recommended actions, including mA Output trim.
   f) Use sensor simulation to verify transmitter response.
5. At the replicated transmitter, make any other configuration changes.
6. Follow your standard procedures to ensure that the replicated transmitter is performing as desired.

4 Configure process measurement

4.1 Configure Sensor Flow Direction Arrow

Display	**Menu → Configuration → Process Measurement → Flow Variables → Flow Direction**
ProLink III	**Device Tools → Configuration → Process Measurement → Flow → Sensor Direction**
Field communicator	**Configure → Manual Setup → Measurements → Flow → Sensor Direction**

Sensor Flow Direction Arrow is used to accommodate installations in which the Flow arrow on the sensor does not match the majority of the process flow. This typically happens when the sensor is accidentally installed backwards.

Sensor Flow Direction Arrow interacts with **mA Output Direction**, **Frequency Output Direction**, and **Totalizer Direction** to control how flow is reported by the outputs and accumulated by the totalizers and inventories.

The **Sensor Flow Direction Arrow** also affects how flow is reported on the transmitter display and via digital communications. This includes ProLink III, a field communicator, and all other user interfaces.

Figure 4-1: Flow arrow on sensor

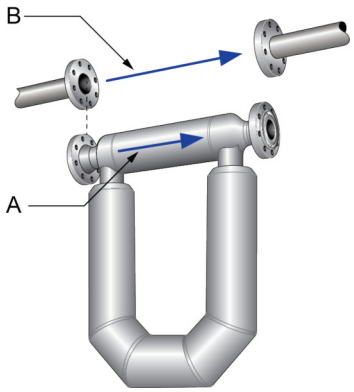

A. Flow arrow
B. Actual flow direction

Procedure

Set **Sensor Flow Direction Arrow** as appropriate.

Option	Description
With Arrow	The majority of flow through the sensor matches the Flow arrow on the sensor. Actual forward flow is processed as forward flow.
Against Arrow	The majority of flow through the sensor is opposite to the Flow arrow on the sensor. Actual forward flow is processed as reverse flow.

Tip
Micro Motion sensors are bidirectional. Measurement accuracy is not affected by actual flow direction or the setting of **Sensor Flow Direction Arrow**. **Sensor Flow Direction Arrow** controls only whether actual flow is processed as forward flow or reverse flow.

Related information

Configure mA Output Direction
Configure Frequency Output Direction
Configure Discrete Output Source
Configure totalizers and inventories
Effect of Sensor Flow Direction Arrow on digital communications

4.2 Configure mass flow measurement

The mass flow measurement parameters control how mass flow is measured and reported. The mass total and mass inventory are derived from the mass flow data.

4.2.1 Configure Mass Flow Measurement Unit

Display	**Menu → Configuration → Process Measurement → Flow Variables → Mass Flow Settings → Units**
ProLink III	**Device Tools → Configuration → Process Measurement → Flow → Mass Flow Rate Unit**
Field communicator	**Configure → Manual Setup → Measurements → Flow → Mass Flow Unit**

Mass Flow Measurement Unit specifies the unit of measure that will be used for the mass flow rate. The default unit used for mass total and mass inventory is derived from this unit.

Procedure

Set **Mass Flow Measurement Unit** to the unit you want to use.

Default: g/sec (grams per second)

Tip
If the measurement unit you want to use is not available, you can define a special measurement unit.

Options for Mass Flow Measurement Unit

The transmitter provides a standard set of measurement units for **Mass Flow Measurement Unit**, plus one user-defined special measurement unit. Different communications tools may use different labels for the units.

Unit description	Label		
	Display	**ProLink III**	**Field communicator**
Grams per second	gram/s	g/sec	g/s
Grams per minute	gram/min	g/min	g/min
Grams per hour	gram/h	g/hr	g/h
Kilograms per second	kg/s	kg/sec	kg/s

Unit description	Label		
	Display	ProLink III	Field communicator
Kilograms per minute	kg/min	kg/min	kg/min
Kilograms per hour	kg/h	kg/hr	kg/h
Kilograms per day	kg/d	kg/day	kg/d
Metric tons per minute	MetTon/min	mTon/min	MetTon/min
Metric tons per hour	MetTon/h	mTon/hr	MetTon/h
Metric tons per day	MetTon/d	mTon/day	MetTon/d
Pounds per second	lb/s	lbs/sec	lb/s
Pounds per minute	lb/min	lbs/min	lb/min
Pounds per hour	lb/h	lbs/hr	lb/h
Pounds per day	lb/d	lbs/day	lb/d
Short tons (2000 pounds) per minute	STon/min	sTon/min	STon/min
Short tons (2000 pounds) per hour	STon/h	sTon/hr	STon/h
Short tons (2000 pounds) per day	STon/d	sTon/day	STon/d
Long tons (2240 pounds) per hour	LTon/h	lTon/hr	LTon/h
Long tons (2240 pounds) per day	LTon/d	lTon/day	LTon/d
Special unit	SPECIAL	Special	Special

Define a special measurement unit for mass flow

Display	**Menu → Configuration → Process Measurement → Flow Variables → Mass Flow Settings → Units → SPECIAL**
ProLink III	**Device Tools → Configuration → Process Measurement → Flow → Mass Flow Rate Unit → Special**
Field communicator	**Configure → Manual Setup → Measurements → Optional Setup → Special Units → Mass Special Units**

Procedure

1. Specify **Base Mass Unit**.

   Base Mass Unit is the existing mass unit that the special unit will be based on.

2. Specify **Base Time Unit**.

   Base Time Unit is the existing time unit that the special unit will be based on.

3. Calculate **Mass Flow Conversion Factor** as follows:
   a) x base units = y special units
   b) **Mass Flow Conversion Factor** = x ÷ y

4. Enter **Mass Flow Conversion Factor**.

   The original mass flow rate value is divided by this value.

5. Set **Mass Flow Label** to the name you want to use for the mass flow unit.
6. Set **Mass Total Label** to the name you want to use for the mass total and mass inventory unit.

The special measurement unit is stored in the transmitter. You can configure the transmitter to use the special measurement unit at any time.

Example: Defining a special measurement unit for mass flow

If you want to measure mass flow in ounces per second (oz/sec):

1. Set **Base Mass Unit** to Pounds (lb).
2. Set **Base Time Unit** to Seconds (sec).
3. Calculate **Mass Flow Conversion Factor**:
   a. 1 lb/sec = 16 oz/sec
   b. **Mass Flow Conversion Factor** = 1 ÷ 16 = 0.0625
4. Set **Mass Flow Conversion Factor** to `0.0625`.
5. Set **Mass Flow Label** to `oz/sec`.
6. Set **Mass Total Label** to `oz`.

4.2.2 Configure Flow Damping

Display	**Menu → Configuration → Process Measurement → Flow Variables → Flow Damping**
ProLink III	**Device Tools → Configuration → Process Measurement → Flow → Flow Rate Damping**
Field communicator	**Configure → Manual Setup → Measurements → Flow → Flow Damping**

Flow Damping controls the amount of damping that will be applied to the measured mass flow rate. It affects flow rate process variables that are based on the measured mass flow rate. This includes volume flow rate and gas standard volume flow rate.

Flow Damping also affects specialized flow rate variables such as temperature-corrected volume flow rate (API Referral) and net mass flow rate (concentration measurement).

Damping is used to smooth out small, rapid fluctuations in process measurement. The damping value specifies the time period, in seconds, over which the transmitter will spread changes in the process variable. At the end of the interval, the internal value of the process variable (the damped value) will reflect 63% of the change in the actual measured value.

Procedure

Set **Flow Damping** to the value you want to use.

- Default: 0.64 seconds
- Range: 0 seconds to 60 seconds

Note
If a number greater than 60 is entered, it is automatically changed to 60.

Tip

- A high damping value makes the process variable appear smoother because the reported value changes slowly.
- A low damping value makes the process variable appear more erratic because the reported value changes more quickly.
- The combination of a high damping value and rapid, large changes in flow rate can result in increased measurement error.
- Whenever the damping value is non-zero, the reported measurement will lag the actual measurement because the reported value is being averaged over time.
- In general, lower damping values are preferable because there is less chance of data loss, and less lag time between the actual measurement and the reported value.
- The transmitter automatically rounds off any entered damping value to the nearest valid value. Therefore, the recommended damping value for gas applications should be 3.2 seconds. If you enter 2.56, the transmitter will round it off to 3.2.
- For filling applications, Micro Motion recommends using the default value of 0.04 seconds.

Effect of flow damping on volume measurement

Flow damping affects volume measurement for liquid volume data. Flow damping also affects volume measurement for gas standard volume data. The transmitter calculates volume data from the damped mass flow data.

Interaction between Flow Damping and mA Output Damping

In some circumstances, both **Flow Damping** and **mA Output Damping** are applied to the reported mass flow value.

Flow Damping controls the rate of change in flow process variables. **mA Output Damping** controls the rate of change reported via the mA Output. If **mA Output Process Variable** is set to Mass Flow Rate, and both **Flow Damping** and **mA Output Damping** are set to non-zero values, flow damping is applied first, and the added damping calculation is applied to the result of the first calculation.

4.2.3 Configure Mass Flow Cutoff

Display	**Menu → Configuration → Process Measurement → Flow Variables → Mass Flow Settings → Low Flow Cutoff**
ProLink III	**Device Tools → Configuration → Process Measurement → Flow → Mass Flow Cutoff**
Field communicator	**Configure → Manual Setup → Measurements → Flow → Mass Flow Cutoff**

Mass Flow Cutoff specifies the lowest mass flow rate that will be reported as measured. All mass flow rates below this cutoff will be reported as 0.

Procedure

Set **Mass Flow Cutoff** to the value you want to use.

- Default: A sensor-specific value set at the factory. If your transmitter was ordered without a sensor, the default may be 0.0.

- Recommendation: 0.5% of maximum flow rate of the attached sensor. See the sensor specifications.

Important
Do not use your meter for measurement with **Mass Flow Cutoff** set to 0.0 g/sec. Ensure that **Mass Flow Cutoff** is set to the value that is appropriate for your sensor.

Effect of Mass Flow Cutoff on volume measurement

Mass Flow Cutoff does not affect volume measurement. Volume data is calculated from the actual mass data rather than the reported value.

Volume flow has a separate Volume Flow Cutoff that is not affected by the Mass Flow Cutoff value.

Interaction between Mass Flow Cutoff and mA Output Cutoff

Mass Flow Cutoff defines the lowest mass flow value that the transmitter will report as measured. **mA Output Cutoff** defines the lowest flow rate that will be reported via the mA Output. If **mA Output Process Variable** is set to Mass Flow Rate, the mass flow rate reported via the mA Output is controlled by the higher of the two cutoff values.

Mass Flow Cutoff affects all reported values and values used in other transmitter behavior (e.g., events defined on mass flow).

mA Output Cutoff affects only mass flow values reported via the mA Output.

Example: Cutoff interaction with mA Output Cutoff lower than Mass Flow Cutoff

Configuration:

- **mA Output Process Variable**: Mass Flow Rate
- **Frequency Output Process Variable**: Mass Flow Rate
- **mA Output Cutoff**: `10` g/sec
- **Mass Flow Cutoff**: `15` g/sec

Result: If the mass flow rate drops below 15 g/sec, mass flow will be reported as 0, and 0 will be used in all internal processing.

Example: Cutoff interaction with mA Output Cutoff higher than Mass Flow Cutoff

Configuration:

- **mA Output Process Variable**: Mass Flow Rate
- **Frequency Output Process Variable**: Mass Flow Rate
- **mA Output Cutoff**: `15` g/sec
- **Mass Flow Cutoff**: `10` g/sec

Result:

- If the mass flow rate drops below 15 g/sec but not below 10 g/sec:
  - The mA Output will report zero flow.
  - The Frequency Output will report the actual flow rate, and the actual flow rate will be used in all internal processing.

- If the mass flow rate drops below 10 g/sec, both outputs will report zero flow, and 0 will be used in all internal processing.

4.3 Configure volume flow measurement for liquid applications

The volume flow measurement parameters control how liquid volume flow is measured and reported. The volume total and volume inventory are derived from volume flow data.

Restriction

You cannot implement both liquid volume flow and gas standard volume flow at the same time. Choose one or the other.

4.3.1 Configure Volume Flow Type for liquid applications

Display	**Menu → Configuration → Process Measurement → Flow Variables → Volume Flow Settings → Flow Type → Liquid**
ProLink III	**Device Tools → Configuration → Process Measurement → Flow → Volume Flow Type → Liquid Volume**
Field communicator	**Configure → Manual Setup → Measurements → Optional Setup → GSV → Volume Flow Type → Liquid Volume**

Volume Flow Type controls whether liquid or gas standard volume flow measurement will be used.

Restriction

Gas standard volume measurement is incompatible with the following applications:

- API Referral
- Concentration measurement
- Advanced Phase Measurement — liquid with gas

For these applications, set **Volume Flow Type** to Liquid.

Procedure

Set **Volume Flow Type** to Liquid.

4.3.2 Configure Volume Flow Measurement Unit for liquid applications

Display	**Menu → Configuration → Process Measurement → Flow Variables → Volume Flow Settings → Units**
ProLink III	**Device Tools → Configuration → Process Measurement → Flow → Volume Flow Rate Unit**
Field communicator	**Configure → Manual Setup → Measurements → Flow → Volume Flow Unit**

Volume Flow Measurement Unit specifies the unit of measurement that will be displayed for the volume flow rate. The unit used for the volume total and volume inventory is based on this unit.

Prerequisites

Before you configure **Volume Flow Measurement Unit**, be sure that **Volume Flow Type** is set to Liquid.

Procedure

Set **Volume Flow Measurement Unit** to the unit you want to use.

Default: l/sec (liters per second)

Tip
If the measurement unit you want to use is not available, you can define a special measurement unit.

Options for Volume Flow Measurement Unit for liquid applications

The transmitter provides a standard set of measurement units for **Volume Flow Measurement Unit**, plus one user-defined measurement unit. Different communications tools may use different labels for the units.

Unit description	Label		
	Display	**ProLink III**	**Field communicator**
Cubic feet per second	ft3/s	ft3/sec	Cuft/s
Cubic feet per minute	ft3/min	ft3/min	Cuft/min
Cubic feet per hour	ft3/h	ft3/hr	Cuft/h
Cubic feet per day	ft3/d	ft3/day	Cuft/d
Cubic meters per second	m3/s	m3/sec	Cum/s
Cubic meters per minute	m3/min	m3/min	Cum/min
Cubic meters per hour	m3/h	m3/hr	Cum/h
Cubic meters per day	m3/d	m3/day	Cum/d
U.S. gallons per second	gal/s	US gal/sec	gal/s
U.S. gallons per minute	gal/m	US gal/min	gal/min
U.S. gallons per hour	gal/h	US gal/hr	gal/h
U.S. gallons per day	gal/d	US gal/day	gal/d
Million U.S. gallons per day	MMgal/d	mil US gal/day	MMgal/d
Liters per second	L/s	l/sec	L/s
Liters per minute	L/min	l/min	L/in
Liters per hour	L/h	l/hr	L/h
Million liters per day	MML/d	mil l/day	ML/d
Imperial gallons per second	Impgal/s	Imp gal/sec	Impgal/s
Imperial gallons per minute	Impgal/m	Imp gal/min	Impgal/min
Imperial gallons per hour	Impgal/h	Imp gal/hr	Impgal/h
Imperial gallons per day	Impgal/d	Imp gal/day	Impgal/d
Barrels per second(1)	bbl/s	barrels/sec	bbl/s
Barrels per minute (1)	bbl/min	barrels/min	bbl/min
Barrels per hour (1)	bbl/h	barrels/hr	bbl/h
Barrels per day (1)	bbl/d	barrels/day	bbl/d

Unit description	Label		
	Display	**ProLink III**	**Field communicator**
Beer barrels per second(2)	Beer bbl/s	Beer barrels/sec	Beer bbl/s
Beer barrels per minute(2)	Beer bbl/min	Beer barrels/min	Beer bbl/min
Beer barrels per hour (2)	Beer bbl/h	Beer barrels/hr	Beer bbl/h
Beer barrels per day (2)	Beer bbl/d	Beer barrels/day	Beer bbl/d
Special unit	SPECIAL	Special	Special

(1) Unit based on oil barrels (42 U.S. gallons).
(2) Unit based on U.S. beer barrels (31 U.S. gallons).

Define a special measurement unit for volume flow

Display	**Menu → Configuration → Process Measurement → Flow Variables → Volume Flow Settings → Units → SPECIAL**
ProLink III	**Device Tools → Configuration → Process Measurement → Flow → Volume Flow Rate Unit → Special**
Field communicator	**Configure → Manual Setup → Measurements → Optional Setup → Special Units → Volume Special Units**

A special measurement unit is a user-defined unit of measure that allows you to report process data, totalizer data, and inventory data in a unit that is not available in the transmitter. A special measurement unit is calculated from an existing measurement unit using a conversion factor.

Procedure

1. Specify **Base Volume Unit**.

   Base Volume Unit is the existing volume unit that the special unit will be based on.

2. Specify **Base Time Unit**.

   Base Time Unit is the existing time unit that the special unit will be based on.

3. Calculate **Volume Flow Conversion Factor** as follows:
   a) x base units = y special units
   b) **Volume Flow Conversion Factor** = x ÷ y

4. Enter **Volume Flow Conversion Factor**.

   The original volume flow rate value is divided by this conversion factor.

5. Set **Volume Flow Label** to the name you want to use for the volume flow unit.
6. Set **Volume Total Label** to the name you want to use for the volume total and volume inventory unit.

The special measurement unit is stored in the transmitter. You can configure the transmitter to use the special measurement unit at any time.

Example: Defining a special measurement unit for volume flow

You want to measure volume flow in pints per second (pints/sec).

1. Set **Base Volume Unit** to Gallons (gal).

2. Set **Base Time Unit** to Seconds (sec).
3. Calculate the conversion factor:
   a. 1 gal/sec = 8 pints/sec
   b. **Volume Flow Conversion Factor** = 1 ÷ 8 = 0.1250
4. Set **Volume Flow Conversion Factor** to `0.1250`.
5. Set **Volume Flow Label** to `pints/sec`.
6. Set **Volume Total Label** to `pints`.

4.3.3 Configure Volume Flow Cutoff

Display	**Menu → Configuration → Process Measurement → Flow Variables → Volume Flow Settings → Low Flow Cutoff**
ProLink III	**Device Tools → Configuration → Process Measurement → Flow → Volume Flow Cutoff**
Field communicator	**Configure → Manual Setup → Measurements → Flow → Volume Flow Cutoff**

Volume Flow Cutoff specifies the lowest volume flow rate that will be reported as measured. All volume flow rates below this cutoff are reported as 0.

Procedure

Set **Volume Flow Cutoff** to the value you want to use.

- Default: 0.0 l/sec (liters per second)
- Range: 0 l/sec to *x* l/sec, where *x* is the sensor's flow calibration factor, multiplied by 0.0002.

Interaction between Volume Flow Cutoff and mAO Cutoff

Volume Flow Cutoff defines the lowest liquid volume flow value that the transmitter will report as measured. **mAO Cutoff** defines the lowest flow rate that will be reported via the mA Output. If **mA Output Process Variable** is set to Volume Flow Rate, the volume flow rate reported via the mA Output is controlled by the higher of the two cutoff values.

Volume Flow Cutoff affects both the volume flow values reported via the outputs and the volume flow values used in other transmitter behavior (e.g., events defined on the volume flow).

mAO Cutoff affects only flow values reported via the mA Output.

Example: Cutoff interaction with mAO Cutoff lower than Volume Flow Cutoff

Configuration:

- **mA Output Process Variable**: Volume Flow Rate
- **Frequency Output Process Variable**: Volume Flow Rate
- **AO Cutoff**: `10` l/sec
- **Volume Flow Cutoff**: `15` l/sec

Result: If the volume flow rate drops below 15 l/sec, volume flow will be reported as 0, and 0 will be used in all internal processing.

Example: Cutoff interaction with mAO Cutoff higher than Volume Flow Cutoff

Configuration:

- **mA Output Process Variable**: Volume Flow Rate
- **Frequency Output Process Variable**: Volume Flow Rate
- **AO Cutoff**: 15 l/sec
- **Volume Flow Cutoff**: 10 l/sec

Result:

- If the volume flow rate drops below 15 l/sec but not below 10 l/sec:
  - The mA Output will report zero flow.
  - The Frequency Output will report the actual flow rate, and the actual flow rate will be used in all internal processing.
- If the volume flow rate drops below 10 l/sec, both outputs will report zero flow, and 0 will be used in all internal processing.

4.4 Configure Gas Standard Volume (GSV) flow measurement

The gas standard volume (GSV) flow measurement parameters control how gas standard volume flow is measured and reported.

Restriction
You cannot implement both liquid volume flow and gas standard volume flow at the same time. Choose one or the other.

4.4.1 Configure Volume Flow Type for gas applications

Display	**Menu → Configuration → Process Measurement → Flow Variables → Volume Flow Settings → Flow Type → Gas**
ProLink III	**Device Tools → Configuration → Process Measurement → Flow → Volume Flow Type → Gas Standard Volume**
Field communicator	**Configure → Manual Setup → Measurements → Optional Setup → GSV → Volume Flow Type → Standard Gas Volume**

Volume Flow Type controls whether liquid or gas standard volume flow measurement will be used.

Restriction
Gas standard volume measurement is incompatible with the following applications:

- API Referral
- Concentration measurement
- Advanced Phase Measurement — liquid with gas

For these applications, set **Volume Flow Type** to Liquid.

Procedure

Set **Volume Flow Type** to Gas.

4.4.2 Configure Standard Gas Density

Display	**Menu → Configuration → Process Measurement → Flow Variables → Volume Flow Settings → Standard Gas Density**
ProLink III	**Device Tools → Configuration → Process Measurement → Flow → Standard Density of Gas**
Field communicator	**Configure → Manual Setup → Measurements → Optional Setup → GSV → Gas Ref Density**

Standard Gas Density is the density of your gas at reference temperature and reference pressure. This is often called *standard density* or *base density*. It is used to calculate the GSV flow rate from the mass flow rate.

Procedure

Set **Standard Gas Density** to the density of your gas at reference temperature and reference pressure.

You can use any reference temperature and reference pressure that you choose. It is not necessary to configure these values in the transmitter.

Tip
ProLink III provides a guided method that you can use to calculate the standard density of your gas if you do not know it.

4.4.3 Configure Gas Standard Volume Flow Measurement Unit

Display	**Menu → Configuration → Process Measurement → Flow Variables → Volume Flow Settings → Units**
ProLink III	**Device Tools → Configuration → Process Measurement → Flow → Gas Standard Volume Flow Unit**
Field communicator	**Configure → Manual Setup → Measurements → Flow → GSV Flow Unit**

Gas Standard Volume Flow Measurement Unit specifies the unit of measure that will be used for the gas standard volume (GSV) flow rate. The unit used for gas standard volume total and gas standard volume inventory is derived from this unit.

Prerequisites

Before you configure **Gas Standard Volume Flow Measurement Unit**, be sure that **Volume Flow Type** is set to Gas Standard Volume.

Procedure

Set **Gas Standard Volume Flow Measurement Unit** to the unit you want to use.

Default: SCFM (Standard Cubic Feet per Minute)

Tip
If the measurement unit you want to use is not available, you can define a special measurement unit.

Options for Gas Standard Volume Flow Measurement Unit

The transmitter provides a standard set of measurement units for **Gas Standard Volume Flow Measurement Unit**, plus one user-defined special measurement unit. Different communications tools may use different labels for the units.

Unit description	Label		
	Display	**ProLink III**	**Field communicator**
Normal cubic meters per second	NCMS	Nm3/sec	Nm3/sec
Normal cubic meters per minute	NCMM	Nm3/min	Nm3/min
Normal cubic meters per hour	NCMH	Nm3/hr	Nm3/hr
Normal cubic meters per day	NCMD	Nm3/day	Nm3/day
Normal liter per second	NLPS	NLPS	NLPS
Normal liter per minute	NLPM	NLPM	NLPM
Normal liter per hour	NLPH	NLPH	NLPH
Normal liter per day	NLPD	NLPD	NLPD
Standard cubic feet per second	SCFS	SCFS	SCFS
Standard cubic feet per minute	SCFM	SCFM	SCFM
Standard cubic feet per hour	SCFH	SCFH	SCFH
Standard cubic feet per day	SCFD	SCFD	SCFD
Standard cubic meters per second	SCMS	Sm3/sec	Sm3/sec
Standard cubic meters per minute	SCMM	Sm3/min	Sm3/min
Standard cubic meters per hour	SCMH	Sm3/hr	Sm3/hr
Standard cubic meters per day	SCMD	Sm3/day	Sm3/day
Standard liter per second	SLPS	SLPS	SLPS
Standard liter per minute	SLPM	SLPM	SLPM
Standard liter per hour	SLPH	SLPH	SLPH
Standard liter per day	SLPD	SLPD	SLPD
Special measurement unit	SPECIAL	Special	Special

Define a special measurement unit for gas standard volume flow

Display	**Menu → Configuration → Process Measurement → Flow Variables → Volume Flow Settings → Units → SPECIAL**
ProLink III	**Device Tools → Configuration → Process Measurement → Flow → Gas Standard Volume Flow Unit → Special**
Field communicator	**Configure → Manual Setup → Measurements → Optional Setup → Special Units → Special Gas Standard Volume Units**

A special measurement unit is a user-defined unit of measure that allows you to report process data, totalizer data, and inventory data in a unit that is not available in the transmitter. A special measurement unit is calculated from an existing measurement unit using a conversion factor.

Procedure

1. Specify **Base Gas Standard Volume Unit**.

   Base Gas Standard Volume Unit is the existing gas standard volume unit that the special unit will be based on.

2. Specify **Base Time Unit**.

   Base Time Unit is the existing time unit that the special unit will be based on.

3. Calculate **Gas Standard Volume Flow Conversion Factor** as follows:
   a) x base units = y special units
   b) **Gas Standard Volume Flow Conversion Factor** = x ÷ y

4. Enter the **Gas Standard Volume Flow Conversion Factor**.

   The original gas standard volume flow value is divided by this conversion factor.

5. Set **Gas Standard Volume Flow Label** to the name you want to use for the gas standard volume flow unit.
6. Set **Gas Standard Volume Total Label** to the name you want to use for the gas standard volume total and gas standard volume inventory unit.

The special measurement unit is stored in the transmitter. You can configure the transmitter to use the special measurement unit at any time.

Example: Defining a special measurement unit for gas standard volume flow

You want to measure gas standard volume flow in thousands of standard cubic feet per minute.

1. Set **Base Gas Standard Volume Unit** to SCFM.
2. Set **Base Time Unit** to minutes (min).
3. Calculate the conversion factor:
   a. One thousands of standard cubic feet per minute = 1000 cubic feet per minute
   b. **Gas Standard Volume Flow Conversion Factor** = 1 ÷ 1000 = 0.001

4. Set **Gas Standard Volume Flow Conversion Factor** to `0.001`.
5. Set **Gas Standard Volume Flow Label** to `KSCFM`.
6. Set **Gas Standard Volume Total Label** to `KSCF`.

4.4.4 Configure Gas Standard Volume Flow Cutoff

Display	**Menu → Configuration → Process Measurement → Flow Variables → Volume Flow Settings → Low Flow Cutoff**
ProLink III	**Device Tools → Configuration → Process Measurement → Flow → Gas Standard Volume Flow Cutoff**
Field communicator	**Configure → Manual Setup → Measurements → Optional Setup → GSV → GSV Cutoff**

Gas Standard Volume Flow Cutoff specifies the lowest gas standard volume flow rate that will reported as measured. All gas standard volume flow rates below this cutoff will be reported as 0.

Procedure

Set **Gas Standard Volume Flow Cutoff** to the value you want to use.

- Default: 0.0
- Range: 0.0 to any positive value

Interaction between Gas Standard Volume Flow Cutoff and mA Output Cutoff

Gas Standard Volume Flow Cutoff defines the lowest Gas Standard Volume flow value that the transmitter will report as measured. **mA Output Cutoff** defines the lowest flow rate that will be reported via the mA Output. If **mA Output Process Variable** is set to Gas Standard Volume Flow Rate, the volume flow rate reported via the mA Output is controlled by the higher of the two cutoff values.

Gas Standard Volume Flow Cutoff affects both the gas standard volume flow values reported through outputs and the gas standard volume flow values used in other transmitter behavior (for example, events defined on gas standard volume flow).

mA Output Cutoff affects only flow values reported via the mA Output.

Example: Cutoff interaction with mA Output Cutoff lower than Gas Standard Volume Flow Cutoff

Configuration:

- **mA Output Process Variable** for the primary mA Output: Gas Standard Volume Flow Rate
- **Frequency Output Process Variable**: Gas Standard Volume Flow Rate
- **mA Output Cutoff** for the primary mA Output: `10` SLPM (standard liters per minute)
- **Gas Standard Volume Flow Cutoff**: `15` SLPM

Result: If the gas standard volume flow rate drops below 15 SLPM, the volume flow will be reported as 0, and 0 will be used in all internal processing.

Example: Cutoff interaction with mA Output Cutoff higher than Gas Standard Volume Flow Cutoff

Configuration:

- **mA Output Process Variable** for the primary mA Output: Gas Standard Volume Flow Rate
- **Frequency Output Process Variable**: Gas Standard Volume Flow Rate
- **mA Output Cutoff** for the primary mA Output: `15` SLPM (standard liters per minute)
- **Gas Standard Volume Flow Cutoff**: `10` SLPM

Result:

- If the gas standard volume flow rate drops below 15 SLPM but not below 10 SLPM:
  - The primary mA Output will report zero flow.
  - The Frequency Output will report the actual flow rate, and the actual flow rate will be used in all internal processing.

- If the gas standard volume flow rate drops below 10 SLPM, both outputs will report zero flow, and 0 will be used in all internal processing.

4.5 Configure density measurement

The density measurement parameters control how density is measured and reported. Density measurement is used with mass flow rate measurement to determine liquid volume flow rate.

4.5.1 Configure Density Measurement Unit

Display	**Menu → Configuration → Process Measurement → Density → Units**
ProLink III	**Device Tools → Configuration → Process Measurement → Density → Density Unit**
Field communicator	**Configure → Manual Setup → Measurements → Density → Density Unit**

Density Measurement Unit controls the measurement units that will be used in density calculations and reporting.

Restriction
If the API Referral application is enabled, you cannot change the density measurement unit here. The density measurement unit is controlled by the API table selection.

Procedure

Set **Density Measurement Unit** to the option you want to use.

Default: g/cm^3 (grams per cubic centimeter)

Options for Density Measurement Unit

The transmitter provides a standard set of measurement units for **Density Measurement Unit**. Different communications tools may use different labels.

Unit description	Label		
	Display	**ProLink III**	**Field communicator**
Specific gravity(1)	SGU	SGU	SGU
Grams per cubic centimeter	g/cm3	g/cm3	g/Cucm
Grams per liter	g/L	g/l	g/L
Grams per milliliter	g/mL	g/ml	g/mL
Kilograms per liter	kg/L	kg/l	kg/L
Kilograms per cubic meter	kg/m3	kg/m3	kg/Cum
Pounds per U.S. gallon	lb/gal	lbs/USgal	lb/gal
Pounds per cubic foot	lb/ft3	lbs/ft3	lb/Cuft
Pounds per cubic inch	lb/in3	lbs/in3	lb/CuIn

Unit description	Label		
	Display	**ProLink III**	**Field communicator**
Degrees API(2)	API	API	degAPI
Short ton per cubic yard	STon/yd3	sT/yd3	STon/Cuyd

(1) Non-standard calculation. This value represents line density divided by the density of water at 60 °F (15.6 °C).
(2) Non standard calculation, unless the API referral application is enabled. Calculated from line density instead of specific gravity.

4.5.2 Configure Density Damping

Display	**Menu → Configuration → Process Measurement → Density → Damping**
ProLink III	**Device Tools → Configuration → Process Measurement → Density → Density Damping**
Field communicator	**Configure → Manual Setup → Measurements → Density → Density Damping**

Density Damping controls the amount of damping that will be applied to density data.

Damping is used to smooth out small, rapid fluctuations in process measurement. The damping value specifies the time period, in seconds, over which the transmitter will spread changes in the process variable. At the end of the interval, the internal value of the process variable (the damped value) will reflect 63% of the change in the actual measured value.

Procedure

Set **Density Damping** to the desired value.

- Default: 1.28 seconds
- Range: 0.0 to 60 seconds

Tip

- A high damping value makes the process variable appear smoother because the reported value changes slowly.
- A low damping value makes the process variable appear more erratic because the reported value changes more quickly.
- The combination of a high damping value and rapid, large changes in density can result in increased measurement error.
- Whenever the damping value is non-zero, the damped value will lag the actual measurement because the damped value is being averaged over time.
- In general, lower damping values are preferable because there is less chance of data loss, and less lag time between the actual measurement and the damped value.
- If a number greater than 60 is entered, it is automatically changed to 60.

Effect of Density Damping on volume measurement

Density Damping affects liquid volume measurement. Liquid volume values are calculated from the damped density value rather than the measured density value. **Density Damping** does not affect gas standard volume measurement.

Interaction between Density Damping and mA Output Damping

When the mA Output is configured to report density, both **Density Damping** and **mA Output Damping** are applied to the reported density value.

Density Damping controls the rate of change in the value of the process variable in transmitter memory. **mA Output Damping** controls the rate of change reported via the mA Output.

If **mA Output Source** is set to Density, and both **Density Damping** and **mA Output Damping** are set to non-zero values, density damping is applied first, and the mA Output damping calculation is applied to the result of the first calculation. This value is reported over the mA Output.

4.5.3 Configure Density Cutoff

Display	**Menu → Configuration → Process Measurement → Density → Cutoff**
ProLink III	**Device Tools → Configuration → Process Measurement → Density → Density Cutoff**
Field communicator	**Configure → Manual Setup → Measurements → Density → Density Cutoff**

Density Cutoff specifies the lowest density value that will be reported as measured. All density values below this cutoff will be reported as 0.

Procedure

Set **Density Cutoff** to the value you want to use.

- Default: 0.2 g/cm^3
- Range: 0.0 g/cm^3 to 0.5 g/cm^3

Effect of Density Cutoff on volume measurement

Density Cutoff affects liquid volume measurement. If the density value goes below **Density Cutoff**, the volume flow rate is reported as 0. **Density Cutoff** does not affect gas standard volume measurement. Gas standard volume values are always calculated from the value configured for **Standard Gas Density** or polled value if configured for polled base density.

4.6 Configure temperature measurement

The temperature measurement parameters control how temperature data is processed. Temperature data is used in several different ways, including temperature compensation, API Referral, and concentration measurement.

4.6.1 Configure Temperature Measurement Unit

Display	**Menu → Configuration → Process Measurement → Temperature → Units**
ProLink III	**Device Tools → Configuration → Process Measurement → Temperature → Temperature Unit**
Field communicator	**Configure → Manual Setup → Measurements → Temperature → Unit**

Temperature Measurement Unit specifies the unit that will be used for temperature measurement.

Procedure

Set **Temperature Measurement Unit** to the option you want to use.

Default: °C (Celsius)

Options for Temperature Measurement Unit

The transmitter provides a standard set of units for **Temperature Measurement Unit**. Different communications tools may use different labels for the units.

Unit description	Label		
	Display	**ProLink III**	**Field communicator**
Degrees Celsius	°C	°C	degC
Degrees Fahrenheit	°F	°F	degF
Degrees Rankine	°R	°R	degR
Kelvin	°K	°K	Kelvin

4.6.2 Configure Temperature Damping

Display	**Menu → Configuration → Process Measurement → Temperature → Damping**
ProLink III	**Device Tools → Configuration → Process Measurement → Temperature → Temperature Damping**
Field communicator	**Configure → Manual Setup → Measurements → Temperature → Damping**

Temperature Damping controls the amount of damping that will be applied to temperature data from the sensor. **Temperature Damping** is not applied to external temperature data.

Damping is used to smooth out small, rapid fluctuations in process measurement. The damping value specifies the time period, in seconds, over which the transmitter will spread changes in the process variable. At the end of the interval, the internal value of the process variable (the damped value) will reflect 63% of the change in the actual measured value.

Procedure

Set **Temperature Damping** to the desired value.

- Default: 4.8 seconds
- Range: 0.0 to 80 seconds

Note
If a number greater than 80 is entered, it is automatically changed to 80.

Tip
- A high damping value makes the process variable appear smoother because the reported value changes slowly.
- A low damping value makes the process variable appear more erratic because the reported value changes more quickly.
- The combination of a high damping value and rapid, large changes in temperature can result in increased measurement error.
- Whenever the damping value is non-zero, the damped value will lag the actual measurement because the damped value is being averaged over time.
- In general, lower damping values are preferable because there is less chance of data loss, and less lag time between the actual measurement and the damped value.

Effect of Temperature Damping on process measurement

Temperature Damping affects all processes and algorithms that use temperature data from the internal sensor RTD.

Temperature compensation

Temperature compensation adjusts process measurement to compensate for the effect of temperature on the sensor tubes.

API Referral

Temperature Damping affects API Referral process variables only if the transmitter is configured to use temperature data from the sensor. If an external temperature value is used for API Referral, **Temperature Damping** does not affect API Referral process variables.

Concentration measurement

Temperature Damping affects concentration measurement process variables only if the transmitter is configured to use temperature data from the sensor. If an external temperature value is used for concentration measurement, **Temperature Damping** does not affect concentration measurement process variables.

4.7 Configure Pressure Measurement Unit

Display	**Menu → Configuration → Process Measurement → Pressure → Units**
ProLink III	**Device Tools → Configuration → Process Measurement → Pressure Compensation → Pressure Unit**
Field communicator	**Configure → Manual Setup → Measurements → Optional Setup → External Pressure/Temperature → Pressure → Unit**

Pressure Measurement Unit controls the measurement unit used for pressure. This unit must match the unit used by the external pressure device.

Pressure data is used for pressure compensation and for API Referral. The device does not measure pressure directly. You must set up a pressure input.

Procedure

Set **Pressure Measurement Unit** to the desired unit.

Default: psi

4.7.1 Options for Pressure Measurement Unit

The transmitter provides a standard set of measurement units for **Pressure Measurement Unit**. Different communications tools may use different labels for the units. In most applications, set **Pressure Measurement Unit** to match the pressure measurement unit used by the remote device.

Unit description	Label		
	Display	**ProLink III**	**Field communicator**
Feet water @ 68 °F	ftH2O @68°F	Ft Water @ 68°F	ftH_2O
Inches water @ 4 °C	inH2O @4°C	In Water @ 4°C	inH_2O @4DegC
Inches water @ 60 °F	inH2O @60°F	In Water @ 60°F	inH_2O @60DegF
Inches water @ 68 °F	inH2O @68°F	In Water @ 68°F	inH_2O
Millimeters water @ 4 °C	mmH2O @4°C	mm Water @ 4°C	mmH_2O @4DegC
Millimeters water @ 68 °F	mmH2O @68°F	mm Water @ 68°F	mmH_2O
Millimeters mercury @ 0 °C	mmHg @0°C	mm Mercury @ 0°C	mmHg
Inches mercury @ 0 °C	inHg @0°C	In Mercury @ 0°C	inHg
Pounds per square inch	psi	PSI	psi
Bar	bar	bar	bar
Millibar	mbar	millibar	mbar
Grams per square centimeter	g/cm2	g/cm2	g/Sqcm
Kilograms per square centimeter	kg/cm2	kg/cm2	kg/Sqcm
Pascals	Pa	pascals	Pa
Kilopascals	kPA	Kilopascals	kPa
Megapascals	mPA	Megapascals	MPa
Torr @ 0 °C	torr	Torr @ 0°C	torr
Atmospheres	atm	atms	atm

4.8 Configure Velocity Measurement Unit

Display	**Menu → Configuration → Process Measurement → Velocity → Units**
ProLink III	**Device Tools → Configuration → Process Measurement → Velocity → Unit**
Field communicator	**Configure → Manual Setup → Measurements → Approximate Velocity → Velocity Unit**

Velocity Measurement Unit controls the measurement unit used to report velocity.

Procedure

Set **Velocity Measurement Unit** to the desired unit.

Default: m/sec

4.8.1 Options for Velocity Measurement Unit

The transmitter provides a standard set of measurement units for **Velocity Measurement Unit**. Different communications tools may use different labels.

Unit description	Label		
	Display	**ProLink III**	**Field communicator**
Feet per minute	ft/min	ft/min	ft/min
Feet per second	ft/s	ft/sec	ft/s
Inches per minute	in/min	in/min	in/min
Inches per second	in/s	in/sec	in/s
Meters per hour	m/h	m/hr	m/h
Meters per second	m/s	m/sec	m/s

5 Configure process measurement applications

5.1 Set up the API Referral application

The API Referral application corrects line density to reference temperature and reference pressure according to American Petroleum Institute (API) standards. The resulting process variable is *referred density*.

Restriction

The API Referral application is not compatible with the following applications:

- Gas Standard Volume Measurement (GSV)
- Piecewise linearization (PWL)
- Advanced Phase Measurement
- Concentration measurement

5.1.1 Set up the API Referral application using the display

Enable the API Referral application using the display

The API Referral application must be enabled before you can perform any setup. If the API Referral application was enabled at the factory, you do not need to enable it now.

Prerequisites

The API Referral application must be licensed on your transmitter.

Procedure

1. Choose **Menu** → **Configuration** → **Process Measurement**.
2. Choose **Flow Variables** → **Volume Flow Settings** and ensure that **Flow Type** is set to Liquid.
3. Return to the ***Process Measurement*** menu.
4. If the concentration measurement application is displayed in the list, choose **Concentration Measurement** and ensure that **Enabled/Disabled** is set to Disabled.

   The concentration measurement application and the API Referral application cannot be enabled simultaneously.

5. Enable API Referral.
   a) Choose **Menu** → **Configuration** → **Process Measurement** → **API Referral**.
   b) Set **Enabled/Disabled** to Enabled.

Configure API Referral using the display

The API Referral parameters specify the API table, measurement units, and reference values to be used in referred density calculations.

Prerequisites

You will need API documentation for the API table that you select.

Depending on your API table, you may need to know the thermal expansion coefficient (TEC) for your process fluid.

You must know the reference temperature and reference pressure that you want to use.

Procedure

1. Choose **Menu** → **Configure** → **Process Measurement** → **API Referral**.
2. Set **API Table** to the API table that you want to use to calculate referred density.

   Each API table is associated with a specific set of equations. Choose your API table based on your process fluid and the measurement unit that you want to use for referred density.

   Your choice also determines the API table that will be used to calculate the correction factor for volume (CTPL or CTL).

3. Refer to the API documentation and confirm your table selection.
   a) Verify that your process fluid falls within range for line density, line temperature, and line pressure.
   b) Verify that the referred density range of the selected table is adequate for your application.
4. If you chose a C table, enter **Thermal Expansion Coefficient (TEC)** for your process fluid.

   Acceptable limits:

   - 230.0×10^{-6} to 930.0×10^{-6} per °F
   - 414.0×10^{-6} to 1674.0×10^{-6} per °C
5. If required, set **Reference Temperature** to the temperature to which density will be corrected in referred density calculations.

   The default reference temperature is determined by the selected API table.

6. If required, set **Reference Pressure** to the pressure to which density will be corrected in referred density calculations.

   The default reference pressure is determined by the selected API table.

Set up temperature and pressure data for API Referral using the display

The API Referral application uses temperature and, optionally, pressure data in its calculations. You must decide how to provide this data, then perform the required configuration and setup.

Note
Fixed values for temperature or pressure are not recommended. Using a fixed temperature or pressure value may produce inaccurate process data.

Prerequisites

The pressure measurement must be gauge pressure, not atmospheric pressure.

The pressure device must use the pressure unit that is configured in the transmitter.

If you are using an external temperature device, it must use the temperature unit that is configured in the transmitter.

Procedure

1. Choose the method to be used to supply temperature data, and perform the required setup.

Method	Description	Setup
Internal temperature	Temperature data from the on-board temperature sensor (RTD) will be used for all measurements and calculations. No external temperature data will be available.	a. Choose **Menu** → **Configuration** → **Process Measurement** → **Temperature**. b. Set **External Temperature** to Off.
Digital communications	A host writes temperature data to the meter at appropriate intervals. This data will be available in addition to the internal temperature data.	a. Choose **Menu** → **Configuration** → **Process Measurement** → **Temperature**. b. Set **External Temperature** to On. c. Perform the necessary host programming and communications setup to write temperature data to the transmitter at appropriate intervals.

2. Choose the method to be used to supply pressure data, and perform the required setup.

Method	Description	Setup
Digital communications	A host writes pressure data to the meter at appropriate intervals.	a. Choose **Menu** → **Configuration** → **Process Measurement** → **Pressure** → **External Pressure**. b. Set **External Pressure** to On. c. Perform the necessary host programming and communications setup to write pressure data to the transmitter at appropriate intervals.

Postrequisites

Choose **Menu** → **Service Tools** → **Service Data** → **View Process Variables** and verify the values for External Temperature and External Pressure.

Need help?

If the value is not correct:

- Ensure that the external device and the meter are using the same measurement unit.
- For digital communications:
  - Verify that the host has access to the required data.

— Verify that the host is writing to the correct register in memory, using the correct data type.

5.1.2 Set up the API Referral application using ProLink III

Enable the API Referral application using ProLink III

Prerequisites

The API Referral application must be licensed and enabled on your transmitter before you can perform any setup. If the API Referral application was enabled at the factory, you do not need to enable it now.

Procedure

1. Choose **Device Tools** → **Configuration** → **Process Measurement** → **Flow** and ensure that **Volume Flow Type** is set to Liquid Volume.
2. Choose **Device Tools** → **Configuration** → **Transmitter Options**.
3. If the concentration measurement application is enabled, disable it and select **Apply**.

   The concentration measurement application and the API Referral application cannot be enabled simultaneously.

4. Enable **API Referral** and select **Apply**.

Configure API Referral using ProLink III

The API Referral parameters specify the API table, measurement units, and reference values to be used in referred density calculations.

Prerequisites

You will need API documentation for the API table that you select.

Depending on your API table, you may need to know the thermal expansion coefficient (TEC) for your process fluid.

You must know the reference temperature and reference pressure that you want to use.

Procedure

1. Choose **Device Tools** → **Configuration** → **Process Measurement** → **API Referral**.
2. Specify the API table to use to calculate referred density.

   Each API table is associated with a specific set of equations.

   a) Set **Process Fluid** to the API table group that your process fluid belongs to.

API table group	Process fluids
A tables	Generalized crude and JP4
B tables	Generalized products: Gasoline, jet fuel, aviation fuel, kerosene, heating oils, fuel oils, diesel, gas oil
C tables	Liquids with a constant base density or known thermal expansion coefficient (TEC). You will be required to enter the TEC for your process fluid.

API table group	Process fluids
D tables	Lubricating oils
E tables	NGL (Natural Gas Liquids) and LPG (Liquid Petroleum Gas)

b) Set **Referred Density Measurement Unit** to the measurement units that you want to use for referred density.

c) Select **Apply**.

These parameters uniquely identify the API table to be used to calculate referred density. The selected API table is displayed, and the meter automatically changes the density unit, temperature unit, pressure unit, and reference pressure to match the API table.

Your choice also determines the API table that will be used to calculate the correction factor for volume (CTPL or CTL).

Restriction
Not all combinations are supported by the API Referral application. See the list of API tables in this manual.

3. Refer to the API documentation and confirm your table selection.
   a) Verify that your process fluid falls within range for line density, line temperature, and line pressure.
   b) Verify that the referred density range of the selected table is adequate for your application.
4. If you chose a C table, enter **Thermal Expansion Coefficient (TEC)** for your process fluid.

   Acceptable limits:
   - 230.0×10^{-6} to 930.0×10^{-6} per °F
   - 414.0×10^{-6} to 1674.0×10^{-6} per °C
5. Set **Reference Temperature** to the temperature to which density will be corrected in referred density calculations. If you choose Other, select the temperature measurement unit and enter the reference temperature.
6. Set **Reference Pressure** to the pressure to which density will be corrected in referred density calculations.

Set up temperature and pressure data for API Referral using ProLink III

The API Referral application uses temperature and, optionally, pressure data in its calculations. You must decide how to provide this data, then perform the required configuration and setup.

Note
Fixed values for temperature or pressure are not recommended. Using a fixed temperature or pressure value may produce inaccurate process data.

Prerequisites

The pressure measurement must be gauge pressure, not atmospheric pressure.

The pressure device must use the pressure unit that is configured in the transmitter.

If you are using an external temperature device, it must use the temperature unit that is configured in the transmitter.

Procedure

1. Choose **Device Tools** → **Configuration** → **Process Measurement** → **API Referral**.
2. Choose the method to be used to supply temperature data, and perform the required setup.

Option	Description	Setup
Internal RTD temperature data	Temperature data from the on-board temperature sensor (RTD) is used.	a. Set **Line Temperature Source** to Internal RTD. b. Select **Apply**.
Digital communications	A host writes temperature data to the meter at appropriate intervals. This data will be available in addition to the internal RTD temperature data.	a. Set **Line Temperature Source** to Fixed Value or Digital Communications. b. Select **Apply**. c. Perform the necessary host programming and communications setup to write temperature data to the meter at appropriate intervals.

3. Choose the method you will use to supply pressure data, and perform the required setup.

Option	Description	Setup
Digital communications	A host writes pressure data to the meter at appropriate intervals.	a. Set **Pressure Source** to Fixed Value or Digital Communications. b. Perform the necessary host programming and communications setup to write pressure data to the meter at appropriate intervals.

Postrequisites

If you are using external temperature data, verify the external temperature value displayed in the ***Inputs*** group on the ProLink III main window.

The current pressure value is displayed in the **External Pressure** field. Verify that the value is correct.

Need help?

If the value is not correct:

- Ensure that the external device and the meter are using the same measurement unit.
- For digital communications:
  - Verify that the host has access to the required data.
  - Verify that the host is writing to the correct register in memory, using the correct data type.

5.1.3 Set up the API Referral application using a field communicator

Enable the API Referral application using a field communicator

Prerequisites

The API Referral application must be licensed and enabled on your transmitter. If the API Referral application was enabled at the factory, you do not need to enable it now.

Volume Flow Type must be set to Liquid.

Procedure

1. Choose **Configure** → **Manual Setup** → **Measurements** → **Optional Setup** → **GSV** and ensure that **Volume Flow Type** is set to Liquid.

   This parameter is available only if API Referral or concentration measurement is not enabled. If you do not see this parameter, it is already set correctly.

2. If the concentration measurement application is enabled, disable it.

   The concentration measurement application and the API Referral application cannot be enabled simultaneously.

3. Enable the API Referral application.
4. If **Advance Phase Measurement** → **Output Type** is other than Disabled, disable it.

   The Advance Phase Measurement application and the API Referral application cannot be enabled simultaneously.

Configure API Referral using a field communicator

The API Referral parameters specify the API table, measurement units, and reference values to be used in referred density calculations.

Prerequisites

You will need API documentation for the API table that you select.

Depending on your API table, you may need to know the thermal expansion coefficient (TEC) for your process fluid.

You must know the reference temperature and reference pressure that you want to use.

Procedure

1. Choose **Configure** → **Manual Setup** → **Measurements** → **Optional Setup** → **API Referral**.
2. Choose **API Referral Setup**.
3. Specify the API table that you want to use to calculate referred density.

   Each API table is associated with a specific set of equations.

   a) Set **API Table Number** to the number that matches the API table units that you want to use for referred density.

      Your choice also determines the measurement unit to be used for temperature and pressure, and the default values for reference temperature and reference pressure.

API table number	Measurement unit for referred density	Temperature measurement unit	Pressure measurement unit	Default reference temperature	Default reference pressure
5	°API	°F	psi (g)	60 °F	0 psi (g)
6(1)	°API	°F	psi (g)	60 °F	0 psi (g)
23	SGU	°F	psi (g)	60 °F	0 psi (g)
24(1)	SGU	°F	psi (g)	60 °F	0 psi (g)
53	kg/m³	°C	kPa (g)	15 °C	0 kPa (g)
54(1)	kg/m³	°C	kPa (g)	15 °C	0 kPa (g)
59(2)	kg/m³	°C	kPa (g)	20 °C	0 kPa (g)
60(2)	kg/m³	°C	kPa (g)	20 °C	0 kPa (g)

*(1) Used only with **API Table Letter** = C.*
*(2) Used only with **API Table Letter** = E.*

b) Set **API Table Letter** to the letter of the API table group that is appropriate for your process fluid.

API table letter	Process fluids
A	Generalized crude and JP4
B	Generalized products: Gasoline, jet fuel, aviation fuel, kerosene, heating oils, fuel oils, diesel, gas oil
C(1)	Liquids with a constant base density or known thermal expansion coefficient (TEC). You will be required to enter the TEC for your process fluid.
D	Lubricating oils
E(2)	NGL (Natural Gas Liquids) and LPG (Liquid Petroleum Gas)

*(1) Used only with **API Table Number**= 6, 24, or **54**.*
*(2) Used only with **API Table Number** = 23, 24, 53, 54, 59, or 60.*

API Table Number and **API Table Letter** uniquely identify the API table. The selected API table is displayed, and the meter automatically changes the density unit, temperature unit, pressure unit, reference temperature, and reference pressure to match the API table.

Your choice also determines the API table that will be used to calculate the correction factor for volume (CTPL or CTL).

Restriction
Not all combinations are supported by the API Referral application. See the list of API tables in this manual.

4. If you chose a C table, enter **Thermal Expansion Coefficient (TEC)** for your process fluid.

   Acceptable limits:

   - 230.0×10^{-6} to 930.0×10^{-6} per °F
   - 414.0×10^{-6} to 1674.0×10^{-6} per °C

5. Refer to the API documentation and confirm your table selection.
   a) Verify that your process fluid falls within range for line density, line temperature, and line pressure.
   b) Verify that the referred density range of the selected table is adequate for your application.
6. If required, set **Reference Temperature** to the temperature to which density will be corrected in referred density calculations.

   The default reference temperature is determined by the selected API table.
7. If required, set **Reference Pressure** to the pressure to which density will be corrected in referred density calculations.

   The default reference pressure is determined by the selected API table. API Referral requires gauge pressure.

Set up temperature and pressure data for API Referral using a field communicator

The API Referral application uses temperature and, optionally, pressure data in its calculations. You must decide how to provide this data, then perform the required configuration and setup.

Note
Fixed values for temperature or pressure are not recommended. Using a fixed temperature or pressure value may produce inaccurate process data.

Prerequisites

The pressure measurement must be gauge pressure, not atmospheric pressure.

The pressure device must use the pressure unit that is configured in the transmitter.

If you are using an external temperature device, it must use the temperature unit that is configured in the transmitter.

Procedure

1. Choose the method to be used to supply temperature data, and perform the required setup.

Method	Description	Setup
Internal RTD temperature data	Temperature data from the on-board temperature sensor (RTD) is used.	a. Choose **Configure** → **Manual Setup** → **Measurements** → **Optional Setup** → **External Pressure/Temperature** → **Temperature**. b. Set **External Temperature** to Disable.

Method	Description	Setup
Digital communications	A host writes temperature data to the meter at appropriate intervals. This data will be available in addition to the internal RTD temperature data.	a. Choose **Configure** → **Manual Setup** → **Measurements** → **Optional Setup** → **External Variables** → **External Temperature**. b. Set **Temperature Compensation** to Enable. c. Perform the necessary host programming and communications setup to write temperature data to the meter at appropriate intervals.

2. Choose the method to be used to supply pressure data, and perform the required setup.

Method	Description	Setup
Digital communications	A host writes pressure data to the meter at appropriate intervals.	a. Choose **Configure** → **Manual Setup** → **Measurements** → **Optional Setup** → **External Variables** → **External Pressure**. b. Set **Pressure Compensation** to Enable. c. Perform the necessary host programming and communications setup to write pressure data to the transmitter at appropriate intervals.

Postrequisites

Choose **Service Tools** → **Variables** → **Process** and verify the values for External Temperature and External Pressure.

Need help?

If the value is not correct:

- Ensure that the external device and the meter are using the same measurement unit.
- For digital communications:
  - Verify that the host has access to the required data.
  - Verify that the host is writing to the correct register in memory, using the correct data type.

5.1.4 API tables supported by the API Referral application

The API tables listed here are supported by the API Referral application.

Table 5-1: API tables, process fluids, measurement units, and default reference values

Process fluid	API tables (calculations)(1)		Referred density (API): unit and range	Default reference temp	Default reference pressure	API standard
	Referred density(2)	CTL or CTPL(3) (4)				
Generalized crude and JP4	5A	6A	Unit: °API Range: 0 to 100 °API	60 °F	0 psi (g)	API MPMS 11.1
	23A	24A	Unit: SGU Range: 0.6110 to 1.0760 SGU	60 °F	0 psi (g)	
	53A	54A	Unit: kg/m³ Range: 610 to 1075 kg/m³	15 °C	0 kPa (g)	
Generalized products (gasoline, jet fuel, aviation fuel, kerosene, heating oils, fuel oils, diesel, gas oil)	5B	6B	Unit: °API Range: 0 to 85 °API	60 °F	0 psi (g)	API MPMS 11.1
	23B	24B	Unit: SGU Range: 0.6535 to 1.0760 SGU	60 °F	0 psi (g)	
	53B	54B	Unit: kg/m³ Range: 653 to 1075 kg/m³	15 °C	0 kPa (g)	
Liquids with a constant density base or known thermal expansion coefficient(5)	N/A	6C	Unit: °API	60 °F	0 psi (g)	API MPMS 11.1
	N/A	24C	Unit: SGU	60 °F	0 psi (g)	
	N/A	54C	Unit: kg/m³	15 °C	0 kPa (g)	
Lubricating oils	5D	6D	Unit: °API Range: −10 to +40 °API	60 °F	0 psi (g)	API MPMS 11.1
	23D	24D	Unit: SGU Range: 0.8520 to 1.1640 SGU	60 °F	0 psi (g)	
	53D	54D	Unit: kg/m³ Range: 825 to 1164 kg/m³	15 °C	0 kPa (g)	
NGL (natural gas liquids) and LPG (liquid petroleum gas)	23E	24E	Unit: SGU	60 °F	0 psi (g)	API MPMS 11.2.4
	53E	54E	Unit: kg/m³	15 °C	0 psi (g)	
	59E	60E	Unit: kg/m³	20 °C	0 psi (g)	

(1) Each API table represents a specialized equation defined by the American Petroleum Institute for a specific combination of process fluid, line conditions, and output.

(2) *Referred density is calculated from line density. You must specify this table, either directly or by selecting the process fluid and base density measurement unit.*
(3) *You do not need to specify this table. It is invoked automatically as a result of the previous table selection.*
(4) *CTL is a correction factor based on online temperature. CTPL is a correction factor based on both line pressure and line temperature. Calculation of CTL and CTPL for A, B, C, and D table products is in accordance with API MPMS Chapter 11.1. Calculation of CTL and CTPL for E table products is in accordance with API MPMS Chapters 11.2.2, 11.2.4, and 11.2.5.*
(5) *The Thermal Expansion Coefficient (TEC) replaces the referred density calculation. Use the CTL/CTPL table instead.*

5.1.5 Process variables from the API Referral application

The API Referral application calculates several different process variables according to API standards.

CTPL	Correction factor based on line temperature and line pressure.
CTL	Correction factor based on line temperature at saturation conditions.
Referred density	The measured density after CTL or CTPL has been applied.
API volume flow	The measured volume flow rate after CTL or CTPL has been applied. Also called *corrected volume flow*.
Batch-weighted average density	One density value is recorded for each unit of flow (e.g., barrel, liter). The average is calculated from these values. The average is reset when the API totalizer is reset. Not available unless a totalizer has been configured with **Source** set to Corrected Volume Flow.
Batch-weighted average temperature	One temperature value is recorded for each unit of flow (e.g., barrel, liter). The average is calculated from these values. The average is reset when the API totalizer is reset. Not available unless a totalizer has been configured with **Source** set to Temperature-Corrected Volume Flow.
API volume total	The total API volume measured by the transmitter since the last API totalizer reset. Also called *corrected volume total*. Not available unless a totalizer has been configured with **Source** set to Corrected Volume Flow.
API volume inventory	The total API volume measured by the transmitter since the last API inventory reset. Also called *corrected volume inventory*. Not available unless an inventory has been configured with **Source** set to Corrected Volume Flow.

5.2 Set up concentration measurement

The concentration measurement application calculates concentration from line density and line temperature.

5.2.1 Preparing to set up concentration measurement

The procedure for setting up concentration measurement application depends on how your device was ordered and how you want to use the application. Review this information before you begin.

Requirements for concentration measurement

To use the concentration measurement application, the following conditions must be met:

- The concentration measurement application must be enabled.
- The API Referral application must be disabled.

- The gas piecewise linearization (PWL) application must be disabled.
- The Advanced Phase Measurement application must be disabled or set for the Liquid with Gas application.
- A concentration matrix must be loaded into one of the six slots on the transmitter.

Tip
In most cases, the concentration matrix that you ordered was loaded at the factory. If it was not, you have several options for loading a matrix. You can also build a matrix.

- **Temperature Source** must be configured and set up.
- One matrix must be selected as the active matrix (the matrix used for measurement).

Requirements for matrices

A matrix is the set of coefficients used to convert process data to concentration, plus related parameters. The matrix can be saved as a file.

The transmitter requires all matrices to be in .matrix format. You can use ProLink III to load matrices in other formats:

- .edf (used by ProLink II)
- .xml (used by ProLink III)

The transmitter can store matrices in two locations:

- One of the six slots in memory
- The transmitter's SD card

Any matrix in a slot is available for use. In other words, it can be selected as the active matrix and used for measurement. Matrices on the SD card are not available for use. Matrices must be loaded into a slot before they can be used for measurement.

All matrices in slots must use the same derived variable. Matrices on the SD card have no requirement for their derived variables to match.

See the following table for the different ways that you can load matrices.

Table 5-2: Methods to load a matrix file

Action	Display	ProLink III	Field communicator
Load matrix from USB drive to SD card	✓		
Load matrix from computer to slot		✓	
Load matrix from SD card to slot	✓	✓	✓

Requirements for derived variables

A *derived variable* is the process variable that a concentration matrix measures. All other process variables are calculated from the derived variable. There are eight possible derived variables. Each matrix is designed for one specific derived variable.

The transmitter can store up to six matrices in six slots. There are additional matrices on the transmitter's SD card. All matrices in the six slots must use the same derived variable. If you change the setting of **Derived Variable**, all matrices are deleted from the six slots. Any matrices on the transmitter's SD card are not affected.

Tip
Always ensure that **Derived Variable** is set correctly before loading matrices into slots.

Derived variables and net flow rate

If you want the transmitter to calculate Net Mass Flow Rate, the derived variable must be set to Mass Concentration (Density). If your matrix is not designed for Mass Concentration (Density), contact customer support for assistance.

If you want the transmitter to calculate Net Volume Flow Rate, the derived variable must be set to Volume Concentration (Density). If your matrix is not designed for Volume Concentration (Density), contact customer support for assistance.

Derived variables based on specific gravity

The following derived variables are based on specific gravity:

- Specific Gravity
- Concentration (Specific Gravity)
- Mass Concentration (Specific Gravity)
- Volume Concentration (Specific Gravity)

If you are using one of these derived variables, two additional parameters can be configured:

- **Reference Temperature of Water** (default setting: 4 °C)
- **Water Density at Reference Temperature** (default setting: 999.99988 kg/m^3)

These two parameters are used to calculate specific gravity.

You cannot set these parameters from the display. If the default values are not appropriate, you must use another method to set them.

Optional tasks in setting up concentration measurement

The following tasks are optional:

- Modifying names and labels
- Configuring extrapolation alerts

5.2.2 Set up concentration measurement using the display

This section guides you through most of the tasks related to setting up and implementing the concentration measurement application.

Restriction
This section does not cover building a concentration matrix. For detailed information on building a matrix, see the *Micro Motion Enhanced Density Application Manual*.

Enable concentration measurement using the display

The concentration measurement application must be enabled before you can perform any setup. If the concentration measurement application was enabled at the factory, you do not need to enable it now.

Prerequisites

The concentration measurement application must be licensed on your transmitter.

Disable the following applications before enabling concentration measurement as concentration measurement cannot be enabled at the same time:

- Advanced Phase Measurement — gas with liquid
- API Referral
- Piecewise linearization (PWL)
- Gas Standard Volume

Procedure

1. Choose **Menu** → **Configuration** → **Process Measurement**.
2. Choose **Flow Variables** → **Volume Flow Settings** and ensure that **Flow Type** is set to Liquid.
3. Return to the ***Process Measurement*** menu.
4. If the API Referral application is displayed in the menu, choose **API Referral** and ensure that **Enabled/Disabled** is set to Disabled.

   The concentration measurement application and the API Referral application cannot be enabled simultaneously.
5. If the Advanced Phase Measurement application is displayed in the menu, choose **Advanced Phase Measurement** → **Application Setup** and ensure that **Enabled/Disabled** is set to Disabled.
6. Enable concentration measurement.
   a) Choose **Menu** → **Configuration** → **Process Measurement** → **Concentration Measurement**.
   b) Set **Enabled/Disabled** to Enabled.

Load a concentration matrix from a USB drive using the display

At least one concentration matrix must be loaded into one of the six slots on your transmitter. You can load up to six matrices into slots. You can also copy matrices to the transmitter's SD card, and load them into slots at a later time.

Tip
In many cases, concentration matrices were ordered with the device and loaded at the factory. You may not need to load any matrices.

WARNING
If the transmitter is in a hazardous area, do not remove the housing cover while the transmitter is powered up. Failure to follow these instructions can cause an explosion resulting in injury or death.

Prerequisites

The concentration measurement application must be enabled on your device.

For each concentration matrix that you want to load, you need a file containing the matrix data. The transmitter's SD card and the ProLink III installation include a set of standard concentration matrices. Other matrices are available from Micro Motion.

Each concentration matrix file must be in .matrix format.

Tip

- If you have a custom matrix on another device, you can save it to a file, then load it to the current device.
- If you have a matrix file in a different format, you can load it using ProLink III.

The .matrix files must be copied to the root directory of a USB drive.

You must know the derived variable that the matrix is designed to calculate.

Important

- All concentration matrices on your transmitter must use the same derived variable.
- If you change the setting of **Derived Variable**, all existing concentration matrices will be deleted from the six slots on the transmitter, but not from the SD card. Set **Derived Variable** before loading concentration matrices.

Procedure

1. Choose **Menu** → **Configuration** → **Process Measurement** → **Concentration Measurement** → **Configure Application** and ensure that the setting of **Derived Variable** matches the derived variable used by your matrix. If it does not, change it as required and click **Apply**.

   Important
   If you change the setting of **Derived Variable**, all existing concentration matrices will be deleted from the six slots, but not from the transmitter's SD card. Verify the setting of **Derived Variable** before continuing.

2. Load the matrix.
   a) Remove the cover from the transmitter's wiring compartment, open the snap flap to access the service port, and insert the USB drive into the service port.
   b) Choose **Menu** → **USB Options** → **USB Drive –> Transmitter** → **Upload Configuration File**.
   c) Set **Config File Type** to Concentration Measurement Matrix.
   d) Select the .matrix file that you want to load, and wait for the transfer to complete.

3. Choose Yes or No when you are asked if you want to apply the settings.

   The transmitter has six slots that are used to store concentration matrices. Any one of these can be used for measurement. The transmitter also has the capability to store multiple concentration matrices on its SD card. These cannot be used for measurement until they are moved to a slot.

Option	Description
Yes	The matrix is saved to the SD card, and the loading process continues with loading the matrix into one of the slots.

Option	Description
No	The matrix is saved to the SD card, and the loading process ends. You must load a matrix into a slot before you can use it for measurement.

4. If you chose Yes, select the slot to load this matrix into, and wait until the load is complete.

   You can load the matrix into any empty slot, or you can overwrite an existing matrix.

Postrequisites

If you loaded the matrix into a slot, choose **Menu** → **Configuration** → **Process Measurement** → **Concentration Measurement** → **Configure Application** → **Active Matrix** and ensure that the matrix is listed.

If you loaded the matrix onto the SD card only, choose **Menu** → **Configuration** → **Process Measurement** → **Concentration Measurement** → **Load Matrix** and ensure that the matrix is listed.

Load a concentration matrix from the SD card using the display

If you have a concentration matrix on the transmitter's SD card, you can load it into one of the six slots on your transmitter. You cannot use the matrix for measurement until it has been loaded into a slot. You can load up to six matrices into slots.

Prerequisites

You must have one or more concentration matrices stored on the transmitter's SD card. The standard matrices are loaded to the SD card at the factory.

You must know the derived variable that the matrix is designed to calculate.

Procedure

1. Choose **Menu** → **Configuration** → **Process Measurement** → **Concentration Measurement** and ensure that the setting of **Derived Variable** matches the derived variable used by your matrix. If it does not, change it as required and click **Apply**.

   Important
   If you change the setting of **Derived Variable**, all existing concentration matrices will be deleted from the six slots, but not from the transmitter's SD card. Verify the setting of **Derived Variable** before continuing.

2. Choose **Menu** → **Configuration** → **Process Measurement** → **Concentration Measurement** → **Load Matrix**.
   The transmitter displays a list of all matrices that are on the SD card.
3. Select the matrix that you want to load.
4. Select the slot that you want to load it into.

   You can load the matrix into any empty slot, or you can overwrite an existing matrix.

Postrequisites

Choose **Menu** → **Configuration** → **Process Measurement** → **Concentration Measurement** → **Configure Application** → **Active Matrix** and ensure that the matrix is listed.

Set up temperature data using the display

The concentration measurement application uses line temperature data in its calculations. You must decide how to provide this data, then perform the required configuration and setup. Temperature data from the on-board temperature sensor (RTD) is always available. Optionally, you can set up an external temperature device and use external temperature data.

The temperature setup that you establish here will be used for all concentration measurement matrices on this meter.

Important
Line temperature data is used in several different measurements and calculations. It is possible to use the internal RTD temperature in some areas and an external temperature in others. The transmitter stores the internal RTD temperature and the external temperature separately. However, the transmitter stores only one alternate temperature value, which may be either the external temperature or the configured fixed value. Accordingly, if you choose a fixed temperature for some uses, and an external temperature for others, the external temperature will overwrite the fixed value.

Prerequisites

If you plan to poll an external device, the primary mA Output (Channel A) must be wired to support HART communications.

Procedure

Choose the method to be used to supply temperature data, and perform the required setup.

Method	Description	Setup
Internal temperature	Temperature data from the on-board temperature sensor (RTD) will be used for all measurements and calculations. No external temperature data will be available.	a. Choose **Menu** → **Configuration** → **Process Measurement** → **Temperature**. b. Set **External Temperature** to Off.
Digital communications	A host writes temperature data to the meter at appropriate intervals. This data will be available in addition to the internal temperature data.	a. Choose **Menu** → **Configuration** → **Process Measurement** → **Temperature**. b. Set **External Temperature** to On. c. Perform the necessary host programming and communications setup to write temperature data to the transmitter at appropriate intervals.

Postrequisites

Choose **Menu** → **Service Tools** → **Service Data** → **View Process Variables** and verify the value for External Temperature.

Need help?
If the value is not correct:

- Ensure that the external device and the meter are using the same measurement unit.
- For digital communications:
  - Verify that the host has access to the required data.

— Verify that the host is writing to the correct register in memory, using the correct data type.

Modify matrix names and labels using the display

For convenience, you can change the name of a concentration matrix and the label used for its measurement unit. This does not affect measurement.

Procedure

1. Choose **Menu** → **Configuration** → **Process Measurement** → **Concentration Measurement** → **Configure Matrix**.
2. Select the matrix that you want to modify.
3. Set **Matrix Name** to the name that will be used for this matrix.
4. Set **Concentration Unit** to the label that will be used for the concentration unit.

   If you want to use a custom label, you can use the display to select Special. However, you cannot use the display to configure the custom label. You must use another tool to change the label from Special to a user-defined string.

Modify extrapolation alerts using the display

You can enable and disable extrapolation alerts, and set extrapolation alert limits. These parameters control the behavior of the concentration measurement application but do not affect measurement directly.

Each concentration matrix is built for a specific density range and a specific temperature range. If line density or line temperature goes outside the range, the transmitter will extrapolate concentration values. However, extrapolation may affect accuracy. Extrapolation alerts are used to notify the operator that extrapolation is occurring.

Each concentration matrix has its own extrapolation alert limits.

Procedure

1. Choose **Menu** → **Configuration** → **Process Measurement** → **Concentration Measurement** → **Configure Matrix**.
2. Select the matrix that you want to modify.
3. Set **Extrapolation Limit** to the point, in percent, at which an extrapolation alert will be posted.
4. Choose **Menu** → **Configuration** → **Process Measurement** → **Concentration Measurement** → **Configure Application** → **Extrapolation Alerts**.
5. Enable or disable the high and low limit alerts for temperature and density as desired.

Example: Extrapolation alerts in action

If **Extrapolation Limit** is set to 5%, **High Limit (Temp)** is enabled, and the active matrix is built for a temperature range of 40 °F (4.4 °C) to 80 °F (26.7 °C), a high-temperature extrapolation alert will be posted if line temperature goes above 82 °F (27.8 °C).

Select the active concentration matrix using the display

You must select the concentration matrix to be used for measurement. Although the transmitter can store up to six concentration matrices, only one matrix can be used for measurement at any one time.

Procedure

1. Choose **Menu** → **Configuration** → **Process Measurement** → **Concentration Measurement** → **Configure Application**.
2. Set **Active Matrix** to the matrix you want to use.

5.2.3 Set up concentration measurement using ProLink III

This section guides you through the tasks required to set up, configure, and implement concentration measurement.

Enable concentration measurement using ProLink III

The concentration measurement application must be enabled before you can perform any setup. If the concentration measurement application was enabled at the factory, you do not need to enable it now.

Prerequisites

The concentration measurement application must be licensed on your transmitter.

Disable the following applications before enabling concentration measurement as concentration measurement cannot be enabled at the same time:

- Advanced Phase Measurement — gas with liquid
- API Referral
- Piecewise linearization (PWL)
- Gas Standard Volume

Procedure

1. Choose **Device Tools** → **Configuration** → **Process Measurement** → **Flow** and ensure that **Volume Flow Type** is set to Liquid Volume.
2. Choose **Device Tools** → **Configuration** → **Process Measurement** → **Advance Phase Measurement** → **APM Status** and ensure that **Application Status** is set to Disable or Liquid with Gas.
3. Choose **Device Tools** → **Configuration** → **Transmitter Options**.
4. Disable API Referral and set the Advance Phase Measurement application to Disabled or Single Liquid.
5. Disable gas Piecewise Linearization (PWL), and set the Advance Phase Measurement application to Disabled or Single Liquid.
6. Set **Concentration Measurement** to Enabled and select **Apply**.

Load a concentration matrix using ProLink III

At least one concentration matrix must be loaded onto your transmitter. You can load up to six.

Prerequisites

The concentration measurement application must be enabled on your device.

For each concentration matrix that you want to load, you need a file containing the matrix data. The ProLink III installation includes a set of standard concentration matrices. Other matrices are available from Micro Motion. The file can be on your computer or in the transmitter's internal memory.

The file must be in one of the formats that ProLink III supports. This includes:

- .xml (ProLink III)
- .matrix (5700)

If you are loading an .xml file, you must know the following information for your matrix:

- The derived variable that the matrix is designed to calculate
- The density unit that the matrix was built with
- The temperature unit that the matrix was built with

If you are loading a .matrix file, you must know the derived variable that the matrix is designed to calculate.

Important

- All concentration matrices on your transmitter must use the same derived variable.
- If you change the setting of **Derived Variable**, all existing concentration matrices will be deleted from the six slots on the transmitter, but not from the transmitter's SD card. Set **Derived Variable** before loading concentration matrices.
- ProLink III loads matrices directly to one of the transmitter's six slots.

Tip

In many cases, concentration matrices were ordered with the device and loaded at the factory. You may not need to load any matrices.

Restriction

You cannot use ProLink III to load a matrix to the transmitter's SD card.

Procedure

1. If you are loading an .xml file, choose **Device Tools** → **Configuration** → **Process Measurement** → **Line Density** and set **Density Unit** to the density unit used by your matrix.

   Important

   When you load a matrix in one of these formats, if the density unit is not correct, concentration data will be incorrect. The density units must match at the time of loading. You can change the density unit after the matrix is loaded.

2. If you are loading an .xml file, choose **Device Tools** → **Configuration** → **Process Measurement** → **Line Temperature**and set **Temperature Unit** to the temperature unit used by your matrix.

   Important

   When you load a matrix in one of these formats, if the temperature unit is not correct, concentration data will be incorrect. The temperature units must match at the time of loading. You can change the temperature unit after the matrix is loaded.

3. Choose **Device Tools** → **Configuration** → **Process Measurement** → **Concentration Measurement**. The ***Concentration Measurement*** window is displayed. It is organized into steps that allow you to perform several different setup and configuration tasks. For this task, you will not use all the steps.

4. In Step 1, ensure that the setting of **Derived Variable** matches the derived variable used by your matrix. If it does not, change it as required and select **Apply**.

   Important
   If you change the setting of **Derived Variable**, all existing concentration matrices will be deleted from the six slots. Verify the setting of **Derived Variable** before continuing.

5. Load one or more matrices.
   a) In Step 2, set **Matrix Being Configured** to the location (slot) to which the matrix will be loaded.
   b) To load a .xml file from your computer, select **Load Matrix from File**, navigate to the file, and load it.
   c) To load a .matrix file from your computer, select **Load Matrix from My Computer**, navigate to the file, and load it.
   d) To load a .matrix file from the transmitter's internal memory, select Load Matrix from 5700 Device Memory, navigate to the file on the transmitter, and load it.
   e) Repeat until all required matrices are loaded.

Set reference temperature values for specific gravity using ProLink III

When **Derived Variable** is set to any option based on specific gravity, you must set the reference temperature for water, then verify the density of water at the configured reference temperature. These values affect specific gravity measurement.

This requirement applies to the following derived variables:

- Specific Gravity
- Concentration (Specific Gravity)
- Mass Concentration (Specific Gravity)
- Volume Concentration (Specific Gravity)

Procedure

1. Choose **Device Tools** → **Configuration** → **Process Measurement** → **Concentration Measurement**. The ***Concentration Measurement*** window is displayed. It is organized into steps that allow you to perform several different setup and configuration tasks. For this task, you will not use all the steps.
2. Scroll to Step 2, set **Matrix Being Configured** to the matrix you want to modify, and select **Change Matrix**.
3. Scroll to Step 3, then perform the following actions:
   a) Set **Reference Temperature for Referred Density** to the temperature to which line density will be corrected for use in the specific gravity calculation.
   b) Set **Reference Temperature for Water** to the water temperature that will be used in the specific gravity calculation.
   c) Set **Water Density at Reference Temperature** to the density of water at the specified reference temperature.

The transmitter automatically calculates the density of water at the specified temperature. The new value will be displayed the next time that transmitter memory is read. You can enter a different value if you prefer.

4. Select **Apply** at the bottom of Step 3.

Set up temperature data using ProLink III

The concentration measurement application uses line temperature data in its calculations. You must decide how to provide this data, then perform the required configuration and setup. Temperature data from the on-board temperature sensor (RTD) is always available. Optionally, you can set up an external temperature device and use external temperature data.

The temperature setup that you establish here will be used for all concentration measurement matrices on this meter.

Important
Line temperature data is used in several different measurements and calculations. It is possible to use the internal RTD temperature in some areas and an external temperature in others. The transmitter stores the internal RTD temperature and the external temperature separately. However, the transmitter stores only one alternate temperature value, which may be either the external temperature or the configured fixed value. Accordingly, if you choose a fixed temperature for some uses, and an external temperature for others, the external temperature will overwrite the fixed value.

Prerequisites

If you plan to poll an external device, the primary mA Output (Channel A) must be wired to support HART communications.

Procedure

1. Choose **Device Tools** → **Configuration** → **Process Measurement** → **Concentration Measurement**.

   The ***Concentration Measurement*** window is displayed. It is organized into steps that allow you to perform several different setup and configuration tasks. For this task, you will not use all the steps.

2. Scroll to Step 4.
3. Choose the method to be used to supply temperature data, and perform the required setup.

Option	Description	Setup
Internal temperature	Temperature data from the on-board temperature sensor (RTD) will be used for all measurements and calculations. No external temperature data will be available.	a. Set **Line Temperature Source** to Internal. b. Click **Apply**.

Option	Description	Setup
Digital communications	A host writes temperature data to the meter at appropriate intervals. This data will be available in addition to the internal RTD temperature data.	a. Set **Line Temperature Source** to Fixed Value or Digital Communications. b. Click **Apply**. c. Perform the necessary host programming and communications setup to write temperature data to the meter at appropriate intervals.

Postrequisites

If you are using external temperature data, verify the external temperature value displayed in the ***Inputs*** group on the ProLink III main window.

Need help?

If the value is not correct:

- Ensure that the external device and the meter are using the same measurement unit.
- For digital communications:
  - Verify that the host has access to the required data.
  - Verify that the host is writing to the correct register in memory, using the correct data type.

Modify matrix names and labels using ProLink III

For convenience, you can change the name of a concentration matrix and the label used for its measurement unit. This does not affect measurement.

Procedure

1. Choose **Device Tools** → **Configuration** → **Process Measurement** → **Concentration Measurement**. The ***Concentration Measurement*** window is displayed. It is organized into steps that allow you to perform several different setup and configuration tasks. For this task, you will not use all the steps.
2. Scroll to Step 2, set **Matrix Being Configured** to the matrix you want to modify, and click **Change Matrix**.
3. Scroll to Step 3, then perform the following actions:
   a) Set **Concentration Units Label** to the label that will be used for the concentration unit.
   b) If you set **Concentration Units Label** to Special, enter the custom label in **User-Defined Label**.
   c) In **Matrix Name**, enter the name to be used for the matrix.
4. Select **Apply** at the bottom of Step 3.

Modify extrapolation alerts using ProLink III

You can enable and disable extrapolation alerts, and set extrapolation alert limits. These parameters control the behavior of the concentration measurement application but do not affect measurement directly.

Each concentration matrix is built for a specific density range and a specific temperature range. If line density or line temperature goes outside the range, the transmitter will extrapolate concentration values. However,

extrapolation may affect accuracy. Extrapolation alerts are used to notify the operator that extrapolation is occurring.

Each concentration matrix has its own extrapolation alert limits.

Procedure

1. Choose **Device Tools** → **Configuration** → **Process Measurement** → **Concentration Measurement**. The ***Concentration Measurement*** window is displayed. It is organized into steps that allow you to perform several different setup and configuration tasks. For this task, you will not use all the steps.
2. Scroll to Step 2, set **Matrix Being Configured** to the matrix you want to modify, and click **Change Matrix**.
3. Scroll to Step 4.
4. Set **Extrapolation Alert Limit** to the point, in percent, at which an extrapolation alert will be posted.
5. Enable or disable the high and low limit alerts for temperature and density, as desired, and click **Apply**.

Example: Extrapolation alerts in action

If **Extrapolation Limit** is set to 5%, **High Limit (Temp)** is enabled, and the active matrix is built for a temperature range of 40 °F (4.4 °C) to 80 °F (26.7 °C), a high-temperature extrapolation alert will be posted if line temperature goes above 82 °F (27.8 °C).

Select the active concentration matrix using ProLink III

You must select the concentration matrix to be used for measurement. Although the transmitter can store up to six concentration matrices, only one matrix can be used for measurement at any one time.

Procedure

1. Choose **Device Tools** → **Configuration** → **Process Measurement** → **Concentration Measurement**. The ***Concentration Measurement*** window displays. It is organized into steps that allow you to perform several different setup and configuration tasks. For this task, you will not use all the steps.
2. Scroll to Step 2, set **Active Matrix** to the matrix you want to use and select **Change Matrix**.

5.2.4 Set up concentration measurement using a field communicator

This section guides you through most of the tasks related to setting up and implementing the concentration measurement application.

Restriction
This section does not cover building a concentration matrix. See the *Micro Motion Enhanced Density Application Manual* for detailed information on building a matrix.

Enable concentration measurement using a field communicator

The concentration measurement application must be enabled before you can perform any setup. If the concentration measurement application was enabled at the factory, you do not need to enable it now.

Prerequisites

The concentration measurement application must be licensed on your transmitter.

Disable the following applications before enabling concentration measurement as concentration measurement cannot be enabled at the same time:

- Advanced Phase Measurement — gas with liquid
- API Referral
- Piecewise linearization (PWL)
- Gas Standard Volume

Procedure

1. Choose **Overview** → **Device Information** → **Licenses** → **Enable/Disable Applications** and ensure that **Volume Flow Type** is set to Liquid.
2. Choose **Overview** → **Device Information** → **Licenses** → **Enable/Disable Applications**.
3. Enable the concentration measurement application.

Load a concentration matrix from the transmitter's SD card using a field communicator

If you have a concentration matrix on the transmitter's SD card, you can move it into one of the six slots on your transmitter. You cannot use the matrix for measurement until it has been loaded into a slot. You can load up to six matrices into slots.

Prerequisites

You must have one or more concentration matrices loaded onto the transmitter's SD card.

You must know the derived variable that the matrix is designed to calculate.

Procedure

1. Choose **Configure** → **Manual Setup** → **Measurements** → **Optional Setup** → **Conc Measurement** → **CM Configuration** and ensure that the setting of **Derived Variable** matches the derived variable used by your matrix. If it does not, change it as required and click **Apply**.

   Important
   If you change the setting of **Derived Variable**, all existing concentration matrices will be deleted from the six slots, but not from the transmitter's SD card. Verify the setting of **Derived Variable** before continuing.

2. Choose **Configure** → **Manual Setup** → **Measurements** → **Optional Setup** → **Conc Measurement** → **Load Matrix File from IM**.
3. Select the slot that you want to load to.

   You can load the matrix into any empty slot, or you can overwrite an existing matrix.

4. Enter the name of the matrix file on the SD card, without the .matrix extension.

   Example

   If the matrix file name is `test.matrix`, enter `test`.

Postrequisites

Choose **Configure** → **Manual Setup** → **Measurements** → **Optional Setup** → **Conc Measurement** → **CM Configuration** → **Active Matrix** and ensure that the selected slot contains the matrix that you loaded.

Set reference temperature values for specific gravity using a field communicator

Field communicator	**Configure** → **Manual Setup** → **Measurements** → **Optional Setup** → **Concentration Measurement** → **Configuration Matrix**

When **Derived Variable** is set to any option based on specific gravity, you must set the reference temperature for water, then verify the density of water at the configured reference temperature. These values affect specific gravity measurement.

To check the setting of **Derived Variable**, choose **Configure** → **Manual Setup** → **Measurements** → **Optional Setup** → **Conc Measurement** → **CM Configuration**.

Important
Do not change the setting of **Derived Variable**. If you change the setting of **Derived Variable**, all existing concentration matrices will be deleted from transmitter memory.

Procedure

1. Set **Matrix Being Configured** to the matrix you want to modify.
2. Choose **Reference Conditions**, then perform the following actions:
   a) Set **Reference Temperature** to the temperature to which line density will be corrected for use in the specific gravity calculation.
   b) Set **Water Reference Temperature** to the water temperature that will be used in the specific gravity calculation.
   c) Set **Water Reference Density** to the density of water at the specified reference temperature.

      The transmitter automatically calculates the density of water at the specified temperature. The new value will be displayed the next time that transmitter memory is read. Optionally, you can enter a different value.

Provide temperature data using a field communicator

The concentration measurement application uses line temperature data in its calculations. You must decide how to provide this data, then perform the required configuration and setup. Temperature data from the on-board temperature sensor (RTD) is always available. Optionally, you can set up an external temperature device and use external temperature data.

The temperature setup that you establish here will be used for all concentration measurement matrices on this meter.

Procedure

1. Choose the method to be used to supply temperature data, and perform the required setup.

Method	Description	Setup
Internal RTD temperature data	Temperature data from the on-board temperature sensor (RTD) is used.	a. Choose **Configure** → **Manual Setup** → **Measurements** → **Optional Setup** → **External Variables** b. Set **Temperature Compensation** to Disable.
Digital communications	A host writes temperature data to the meter at appropriate intervals. This data will be available in addition to the internal RTD temperature data.	a. Choose **Configure** → **Manual Setup** → **Measurements** → **Optional Setup** → **External Variables**. b. Set **Temperature Compensation** to Enable. c. Perform the necessary host programming and communications setup to write temperature data to the meter at appropriate intervals.

2. Choose the method to be used to supply temperature data, and perform the required setup.

Method	Description	Setup
Internal RTD temperature data	Temperature data from the on-board temperature sensor (RTD) is used.	a. Choose **Configure** → **Manual Setup** → **Measurements** → **Optional Setup** → **External Pressure/Temperature** → **Temperature**. b. Set **External Temperature** to Disable.
Polling	The meter polls an external device for temperature data. This data will be available in addition to the internal RTD temperature data.	a. Choose **Configure** → **Manual Setup** → **Measurements** → **Optional Setup** → **External Pressure/Temperature** → **Temperature**. b. Set **External Temperature** to Enable. c. Choose **Configure** → **Manual Setup** → **Measurements** → **Optional Setup** → **External Pressure/Temperature** → **External Polling**. d. Set **Poll Control** to Poll as Primary or Poll as Secondary. e. Choose an unused polling slot. f. Set **External Device Tag** to the HART tag of the external temperature device. g. Set **Polled Variable** to Temperature.

Option	Description
Poll as Primary	No other HART masters will be on the network. A field communicator is not a HART master.
Poll as Secondary	Other HART masters will be on the network. A field communicator is not a HART master.

Method	Description	Setup
Digital communications	A host writes temperature data to the meter at appropriate intervals. This data will be available in addition to the internal RTD temperature data.	a. Choose **Configure** → **Manual Setup** → **Measurements** → **Optional Setup** → **External Pressure/Temperature** → **Temperature**. b. Set **External Temperature** to Enable. c. Perform the necessary host programming and communications setup to write temperature data to the meter at appropriate intervals.

Postrequisites

To verify the value for **External Temperature**, choose **Service Tools** → **Variables** → **Process** → **External Temperature**.

Need help?

If the value is not correct:

- Ensure that the external device and the meter are using the same measurement unit.
- For digital communications:
  - Verify that the host has access to the required data.
  - Verify that the host is writing to the correct register in memory using the correct data type.

Modify matrix names and labels using a field communicator

Field communicator	**Configure** → **Manual Setup** → **Measurements** → **Optional Setup** → **Conc Measurement** → **Configure Matrix**

For convenience, you can change the name of a concentration matrix and the label used for its measurement unit. This does not affect measurement.

Procedure

1. Set **Matrix Being Configured** to the matrix you want to modify.
2. Set **Matrix Name** to the name to be used for the matrix.
3. Set **Concentration Unit** to the label that will be used for the concentration unit.
4. If you set **Concentration Unit** to Special, choose **Label** and enter the custom label.

Modify extrapolation alerts using a field communicator

You can enable and disable extrapolation alerts, and set extrapolation alert limits. These parameters control the behavior of the concentration measurement application but do not affect measurement directly.

Each concentration matrix is built for a specific density range and a specific temperature range. If line density or line temperature goes outside the range, the transmitter will extrapolate concentration values. However, extrapolation may affect accuracy. Extrapolation alerts are used to notify the operator that extrapolation is occurring.

Each concentration matrix has its own extrapolation alert limits.

Procedure

1. Choose **Configure** → **Manual Setup** → **Measurements** → **Optional Setup** → **Conc Measurement** → **Configure Matrix**.
2. Set **Matrix Being Configured** to the matrix you want to modify.
3. Set **Extrapolation Alert Limit** to the point, in percent, at which an extrapolation alert will be posted.
4. Choose **Configure** → **Alert Setup** → **CM Alerts**.
5. Enable or disable the high and low alerts for temperature and density, as desired.

Extrapolation alerts in action

If **Extrapolation Limit** is set to 5%, **High Limit (Temp)** is enabled, and the active matrix is built for a temperature range of 40 °F (4.4 °C) to 80 °F (26.7 °C), a high-temperature extrapolation alert will be posted if line temperature goes above 82 °F (27.8 °C).

Select the active concentration matrix using a field communicator

Field communicator	**Configure** → **Manual Setup** → **Measurements** → **Optional Setup** → **Conc Measurement** → **CM Configuration**

You must select the concentration matrix to be used for measurement. Although the transmitter can store up to six concentration matrices, only one matrix can be used for measurement at any one time.

Procedure

Set **Active Matrix** to the matrix you want to use.

5.3 Configure the batching application

5.3.1 Configure global batching parameters

Display	**Menu** → **Configuration** → **Process Measurement** → **Batcher** → **Global**
ProLink III	**Device Tools** → **Configuration** → **Batcher** → **Batch Settings**
Field communicator	**Configure** → **Manual Setup** → **Inputs/Outputs** → **Batcher** → **Batcher**

The global batching parameters apply to all batch presets and all batches.

Procedure

1. Set the flow source to the process variable that will be used to configure and measure the batch.

   Note
   This field is named **Batch Variable** in the display.

Options	Description
Mass Flow Rate	The batch is measured by mass, using the current mass unit.
Volume Flow Rate	The batch is measured by volume, using the current volume unit.
API Corrected Vol Flow	The batch is measured using the API calculated correction factor.
GSV Flow (only if configured)	The batch is measured using the gas standard volume flow rate.

Options	Description
CM Standard Vol Flow (when licensed and enabled)	The batch is measured using the standard volume flow rate at reference temperature.
CM Net Volume Flow (when licensed and enabled)	The batch is measured using the net volume flow rate at reference temperature.
CM Net Mass Flow (when licensed and enabled)	The batch is measured using the net mass flow rate.
FL Flow Rate	The batch is measured using the Frequency Input.

Example

The current measurement unit for mass flow rate is g/sec. The batch will be configured and measured in g (grams).

2. Set the maximum target to the largest batch that will be allowed.

Note
This field is called **Preset Max Target** with a field communicator.

- Default: 999999999.0 kg or the equivalent value in the configured measurement unit
- Range: Unlimited

If you try to set the batch target to a larger amount, the transmitter will reject the setting.

3. Set the maximum batch time to the maximum number of seconds that a batch will be allowed to run.

If the batch does not reach its target before this period expires, the batch is halted automatically and an alert is posted.

- Default: 0 seconds
- Range: 0 to 86,400 seconds (1 day)

If **Maximum Fill Time** is set to 0, the control is disabled and no maximum time is applied to batches.

4. For two-stage batching, set the following parameters:

Parameter	Value
Number of Stages	Set to 2. Setting this parameter to 1 disables two-stage batching.
Configure Presets by	**% Target**: The values for **Open Primary**, **Open Secondary**, **Close Primary**, and **End Warning** are each configured as a percent of target. **Quantity**: The values for **Open Primary** and **Open Secondary** are each configured as a quantity at which the valve should open. The values for **Close Primary** and **End Warning** are each configured as a quantity that is subtracted from the target.

5.3.2 Configure batch presets

Display	**Menu → Configuration → Process Measurement → Batcher → Presets**
ProLink III	**Device Tools → Configuration → Batcher → Preset Configurations**
Field communicator	**Configure → Manual Setup → Inputs/Outputs → Batcher → Setup Presets**

A batch preset is a predefined group of batching parameters. You can define and save up to six batch presets.

When you run a batch, you must choose a preset. You can modify the batch target before you run the batch. All other settings are fixed.

Procedure

1. Select the preset number that you want to configure.
2. Set the preset name to the name to be used for this preset.

   The name can be up to eight characters in length. Valid characters include A-Z and 0-9.
3. Set the preset target to the size of the batch.

   When the transmitter has measured the specified amount and applied the selected form of AOC, it closes the valve.
4. Optional: Set the preset end warning point to the point in the batch at which a Modbus coil will be set.

   The end warning allows the transmitter to alert the operator to the end of batch. The operator can prepare for the end of the batch, e.g., by adjusting the flow rate to avoid overflow.
5. Enable or disable the preset as desired.

   Note
   This field is named **Preset Status** in the display.

Option	Description
Enabled (On)	The preset is available for use. You can select it to run a batch.
Disabled (Off)	The preset is not available for use. You cannot select it to run a batch. You can always enable it at a later time.

   Preset 1 is always enabled and cannot be disabled.
6. Optional: For two-stage batching, set **% Target** or **Quantity** for the following parameters:

   Two-stage batching is a batch that is run on a gas and liquid mixture flowing through a pipeline.

% Target	The values for **Open Primary**, **Open Secondary**, **Close Primary**, and **End Warning** are each configured as a percent of target.
Quantity	The values for **Open Primary** and **Open Secondary** are each configured as a quantity at which the valve should open. The values for **Close Primary** and **End Warning** are each configured as a quantity that is subtracted from the target.

Parameter	Description
End Warning	The % target or quantity level that must be reached to alert the operator that a batch is ending.
Open Primary	The % target or quantity level that must be reached to open the primary valve.
Open Secondary	The % target or quantity level that must be reached to open the secondary valve.
Close Primary	The % target or quantity level that must be reached to close the primary valve. When configuring by quantity, the amount is referenced to the end of the batch and not to the beginning of the batch.

5.3.3 Configure a DO for valve control

Display	**Menu → Configuration → Inputs/Outputs**
ProLink III	**Device Tools → Configuration → I/O → Channels**
Field communicator	**Configure → Manual Setup → Inputs/Outputs**

The transmitter runs a batch by opening and closing a valve. You can optionally configure a Discrete Output (DO) to send the open and close commands to the valve.

Prerequisites

- Channel C or Channel D must be available for valve control.
- The selected channel must be wired to the valve.
- The selected channel and the valve must be powered by a power supply, not by the transmitter.

Procedure

1. Verify the wiring between the selected channel and the valve.
2. Configure the selected channel to operate as a Discrete Output.
   a) Set Channel C or Channel D to operate as a Discrete Output.
   b) Set **Power Source** to External.
3. Configure the channel for valve control.
   a) Do one of the following depending on which tool you are using:

Tool	Steps
Display	1. Select the Discrete Output to be used for valve control. 2. Choose **I/O Settings**.
ProLink III	1. Navigate to **Device Tools → Configuration → I/O → Outputs → Discrete Output**. 2. Select the Discrete Output to be used for valve control.

Tool	Steps
Field communicator	1. Select the Discrete Output to be used for valve control. 2. Select **Discrete Output** *x*.

b) Set **Source** to the batch primary valve.

c) Set **Polarity** to match the wiring.

The ON state of the Discrete Output must open the valve, and the OFF state must close the valve.

d) Set **Fault Action** so that the valve will be closed if a fault occurs.

The appropriate setting is either Upscale or Downscale. The setting to use for your installation depends on your valve type, your wiring, and your setting for **Polarity**.

4. Optional: For two-stage batching, assign one of the Discrete Outputs to the secondary valve.

   You can also assign one of the Discrete Outputs to a pump when the batcher is configured for single stage.

5.3.4 Configure AOC

Display	**Menu → Configuration → Process Measurement → Batcher → AOC**
ProLink III	**Device Tools → Configuration → Batcher → Batching Options**
Field communicator	**Configure → Manual Setup → Inputs/Outputs → Batcher → Batcher**

Automatic Overshoot Compensation (AOC) adjusts the timing of the valve close command to minimize overshoot. The valve close command is sent before the target is reached, to compensate for the time required for the valve to close completely. AOC is applied to all presets and all batches.

There are three options for AOC:

Compensation Off	The transmitter sends the close command when the measured batch total reaches the configured target.
Fixed Compensation Value	The transmitter sends the close command when the measured batch total equals the target minus the value configured for **Fixed Overshoot Compensation**. This value is configured in the current mass or volume unit, and applies to all presets.
AOC Algorithm	The transmitter compares the actual measured amount of each batch to the batch target, and determines the adjustment by calibrating itself according to an internal algorithm. You can choose to stop AOC calibration when you are satisfied with the result, or you can set up rolling (continuous) AOC calibration.

Procedure

- To turn compensation off:

Tool	Steps
Display	Set **Compensation Mode** to Off.
ProLink III	Set **AOC Compensation Mode** to Compensation Off.
Field communicator	Set **Compensation Mode** to No Compensation.

- To use the Fixed Compensation Value option:
  a) Set the AOC compensation mode to fixed.

Tool	Steps
Display	Set **Compensation Mode** to Fixed.
ProLink III	Set **AOC Compensation Mode** to Fixed Compensation Value.
Field communicator	Set **Compensation Mode** to Fixed Value.

  b) Set the fixed value or the fixed overshoot compensation to the quantity to be subtracted from the batch target.

Important
Adjust the fixed value:
— Whenever the process changes (e.g., flow rate, process fluid)
— Whenever you change any configuration parameter that can affect flow measurement (e.g., damping)

- To use the AOC Algorithm option:

Tool	Steps
Display	Set **Compensation Mode** to AOC.
ProLink III	Set **AOC Compensation Mode** to AOC Algorithm.
Field communicator	Set **Compensation Mode** to AOC.

6 Configure advanced options for process measurement

6.1 Configure Response Time

Display	**Menu → Configuration → Process Measurement → Response Time**
ProLink III	**Device Tools → Configuration → Process Measurement → Response Time**
Field communicator	Not available

Response Time controls the speed of various internal processes that are involved in retrieving electronic data from the sensor and converting it to process data.

Response Time affects all process and diagnostic variables.

Restriction

Response Time is configurable only if you are using the enhanced core processor. If you are using the standard core processor, **Response Time** is set to Low Filtering and cannot be changed.

Procedure

Set **Response Time** as desired.

Option	Description
Normal	Appropriate for typical applications.
High Filtering	Slower response. Appropriate for applications with significant amount of entrained gas or process noise.
Low Filtering	Fastest response. Appropriate for proving or filling applications.
Service	Do not select unless directed by Micro Motion personnel.

6.2 Detect and report two-phase flow

Two-phase flow (gas in a liquid process or liquid in a gas process) can cause a variety of process control issues. The transmitter provides two methods to detect and report or respond to two-phase flow.

6.2.1 Detect two-phase flow using density

Display	**Menu → Configuration → Process Measurement → Density**
ProLink III	**Device Tools → Configuration → Process Measurement → Density**
Field communicator	**Configure → Manual Setup → Measurements → Density → Slug Low Limit** **Configure → Manual Setup → Measurements → Density → Slug High Limit** **Configure → Manual Setup → Measurements → Density → Slug Duration**

The transmitter can use line density data to detect two-phase flow (gas in a liquid process or liquid in a gas process). The density limits are user-specified. When two-phase flow is detected, an alert is posted.

Procedure

1. Set **Two-Phase Flow Low Limit** to the lowest density value that is considered normal in your process.

   Values below this will cause the transmitter to post a Process Aberration alert.

   Tip
   Gas entrainment can cause your process density to drop temporarily. To reduce the occurrence of two-phase flow alerts that are not significant to your process, set **Two-Phase Flow Low Limit** slightly below your expected lowest process density.

   You must enter **Two-Phase Flow Low Limit** in g/cm³, even if you configured another unit for density measurement.

   - Default: 0 g/cm³
   - Range: 0 g/cm³ to the sensor limit

2. Set **Two-Phase Flow High Limit** to the highest density value that is considered normal in your process.

   Values above this will cause the transmitter to post a Process Aberration alert.

   Tip
   To reduce the occurrence of two-phase flow alerts that are not significant to your process, set **Two-Phase Flow High Limit** slightly above your expected highest process density.

   You must enter **Two-Phase Flow High Limit** in g/cm³, even if you configured another unit for density measurement.

   - Default: 5 g/cm³
   - Range: 5 g/cm³ to the sensor limit

3. Set **Two-Phase Flow Timeout** to the number of seconds that the transmitter will wait for a two-phase flow condition to clear before posting the alert.
   - Default: 0 seconds, meaning that the alert will be posted immediately
   - Range: 0 to 60 seconds

6.2.2 Detect two-phase flow using sensor diagnostics

Display	**Menu → Configuration → Inputs/Outputs → Channel *x* → I/O Settings → Source**
ProLink III	**Device Tools → Configuration → I/O → Outputs → mA Output *x***
Field communicator	**Configure → Manual Setup → Inputs/Outputs → Channel *x* → mA Output *x* → mAO*x*Source**

The transmitter always monitors sensor diagnostics and applies a two-phase flow algorithm. You can assign an mA Output to report the results of this calculation: single-phase flow, moderate two-phase flow, or severe two-phase flow. Severe two-phase flow can cause the meter to stop functioning.

Procedure

Set **mA Output Source** to Two-Phase Flow Detection.

The signal from the mA Output indicates the current state of the process:

- 12 mA: Single-phase flow
- 16 mA: Moderate two-phase flow
- 20 mA: Severe two-phase flow

6.3 Configure Flow Rate Switch

Display	**Menu → Configuration → Alert Setup → Enhanced Events → Flow Rate Switch**
ProLink III	**Device Tools → Configuration → I/O → Outputs → Discrete Output → Source → Flow Switch Indication**
Field communicator	**Configure → Manual Setup → Inputs/Outputs → Channel *x* → Discrete Output *x* → Flow Switch**

Flow Rate Switch is used to indicate that the flow rate has moved past a user-specified setpoint, in either direction. The flow rate switch is implemented with a user-configurable hysteresis.

Typically, a Discrete Output is assigned as the flow rate switch indicator. The Discrete Output can be wired to an external device such as a light or a horn.

Prerequisites

A channel must be configured as a Discrete Output, and the Discrete Output must be available for this use.

Procedure

1. Set **Discrete Output Source** to Flow Switch, if you have not already done so.
2. Set **Flow Switch Variable** to the flow variable that you want to use to control the flow rate switch.
3. Set **Flow Switch Setpoint** to the value at which the flow switch will be triggered (after **Hysteresis** is applied).

   Depending on the polarity of the Discrete Output:

   - If the flow rate is below this value, the Discrete Output is ON.
   - If the flow rate is above this value, the Discrete Output is OFF.

4. Set **Hysteresis** to the percentage of variation above and below the setpoint that will operate as a deadband.

   Hysteresis defines a range around the setpoint within which the flow rate switch will not change.

   - Default: 5%
   - Range: 0.1% to 10%

   #### Example

   If **Flow Switch Setpoint** = `100` g/sec and **Hysteresis** = `5%`, and the first measured flow rate is above 100 g/sec, the discrete output is OFF. It will remain OFF unless the flow rate drops below 95 g/sec. If this happens, the discrete output will turn ON, and remain ON until the flow rate rises above 105 g/sec. At this point it turns OFF and will remain OFF until the flow rate drops below 95 g/sec.

Related information

Configure a Discrete Output

6.4 Configure events

An event occurs when the real-time value of a user-specified process variable moves past a user-defined setpoint. Events are used to provide notification of process changes or to perform specific transmitter actions if a process change occurs.

Your transmitter supports two event models:

- Basic event model
- Enhanced event model

Tip

Use enhanced events rather than basic events. Enhanced events can perform all the functions of basic events, and they add the following:

- Defining events by range (In Range or Out of Range), in addition to High and Low
- Triggering transmitter actions if an event occurs

6.4.1 Configure a basic event

Display	Not available
ProLink III	**Device Tools** → **Configuration** → **Events** → **Basic Events**
Field communicator	Not available

A basic event is used to provide notification of process changes. A basic event occurs (is ON) if the real-time value of a user-specified process variable moves above (HI) or below (LO) a user-defined setpoint. Event status can be queried via digital communications, and a Discrete Output can be configured to report event status.

You can define up to two basic events.

Procedure

1. Select the event that you want to configure.
2. Assign a process variable to the event.
3. Specify **Event Type**.

Option	Description
HI	$x > A$ The event occurs when the value of the assigned process variable (x) is greater than the setpoint (**Setpoint A**), endpoint not included.
LO	$x < A$ The event occurs when the value of the assigned process variable (x) is less than the setpoint (**Setpoint A**), endpoint not included.

4. Set a value for **Setpoint A**.
5. Optional: Configure a Discrete Output to switch states in response to the event status.

6.4.2 Configure an enhanced event

Display	**Menu → Configuration → Alert Setup → Enhanced Events**
ProLink III	**Device Tools → Configuration → Events → Enhanced Events**
Field communicator	**Configure → Alert Setup → Enhanced Events**

An enhanced event is used to provide notification of process changes and, optionally, to perform specific transmitter actions if the event occurs. An enhanced event occurs (is ON) if the real-time value of a user-specified process variable moves above (HI) or below (LO) a user-defined setpoint, or in range (IN) or out of range (OUT) with respect to two user-defined setpoints.

You can define up to five enhanced events. For each enhanced event, you can assign one or more actions that the transmitter will perform if the enhanced event occurs.

Procedure

1. Select the event that you want to configure.
2. Assign a process variable to the event.
3. Specify **Event Type**.

Option	Description
HI	$x > A$ The event occurs when the value of the assigned process variable (x) is greater than the setpoint (**Setpoint A**), endpoint not included.
LO	$x < A$ The event occurs when the value of the assigned process variable (x) is less than the setpoint (**Setpoint A**), endpoint not included.
IN	$A \leq x \leq B$ The event occurs when the value of the assigned process variable (x) is *in range,* that is, between **Setpoint A** and **Setpoint B**, endpoints included.
OUT	$x \leq A$ or $x \geq B$ The event occurs when the value of the assigned process variable (x) is *out of range,* that is, less than **Setpoint A** or greater than **Setpoint B**, endpoints included.

4. Set values for the required setpoints.
   - For HI and LO events, set **Setpoint A**.
   - For IN and OUT events, set **Setpoint A** and **Setpoint B**.
5. Optional: Configure a Discrete Output to switch states in response to the event status.
6. Optional: Specify the action or actions that the transmitter will perform when the event occurs.

Option	Description
Display	**Menu** → **Configuration** → **Alert Setup** → **Enhanced Events**, select any enhanced event, and choose **Assign Actions**
ProLink III	**Device Tools** → **Configuration** → **I/O** → **Inputs** → **Action Assignment**
Field communicator	**Configure** → **Alert Setup** → **Enhanced Events**

Options for Enhanced Event Action

Action	Label		
	Display	**PLIII**	**FC**
Standard			
Start sensor zero	Start Zero Calibration	Start Sensor Zero	Start Sensor Zero
Totalizers			
Start/stop all totalizers and inventories	Start/stop all totalizers	Start or Stop All Totalizers	Start/Stop All Totals
Reset totalizer X	Reset Total X	Totalizer X	Reset Total X
Reset all totalizers and inventories	Reset All Totals	Reset All Totals	Reset All Totals
Concentration measurement			
Increment CM matrix	Increment Matrix	Increment ED Curve	Increment Curve
Batching			
Begin batch	Begin Batch	Begin Batch	Start Batch
End batch	End Batch	End Batch	End Batch
Resume batch	Resume Batch	Resume Batch	Resume Batch
Increment batch preset	Increment Preset	Increment Batch Preset	Increment Preset
Inhibit batch totalizer	Inhibit Totalizer	Inhibit Batch Totalizing	Inhibit Batch Totalizing
Inhibit batch	Inhibit Batch	Inhibit Batch Start	Inhibit Batch Start
Inhibit batch flow	Inhibit Flow	Allow Batch End with Flow	Allow Batch End with Flow

6.5 Configure totalizers and inventories

Display	**Menu** → **Configuration** → **Process Measurement** → **Totalizers & Inventories**
ProLink III	**Device Tools** → **Totalizer Control** → **Totalizers**
Field communicator	**Configure** → **Manual Setup** → **Measurements** → **Optional Setup** → **Configure Totalizers**

The transmitter provides seven configurable totalizers and seven configurable inventories. Each totalizer and each inventory can be configured independently.

Totalizers track the process since the last totalizer reset. Inventories track the process since the last inventory reset. Inventories are typically used to track the process across totalizer resets.

Tip
The default configurations cover the most typical uses of totalizers and inventories. You may not need to change any configurations.

Prerequisites

Before configuring the totalizers and inventories, ensure that the process variables you plan to track are available on the transmitter.

Procedure

1. Select the totalizer or inventory that you want to configure.
2. Set **Totalizer Source** or **Inventory Source** to the process variable that the totalizer or inventory will track.

Option	Description
Mass flow	The totalizer or inventory will track Mass Flow Rate and calculate total mass since the last reset.
Volume flow	The totalizer or inventory will track Volume Flow Rate and calculate total volume since the last reset.
Gas standard volume flow	The totalizer or inventory will track Gas Standard Volume Flow Rate and calculate total volume since the last reset.
Temperature-corrected volume flow	The totalizer or inventory will track Temperature-Corrected Volume Flow Rate and calculate total volume since the last reset.
Standard volume flow	The totalizer or inventory will track Standard Volume Flow Rate and calculate total volume since the last reset.
Net mass flow	The totalizer or inventory will track Net Mass Flow Rate and calculate total mass since the last reset.
Net volume flow	The totalizer or inventory will track Net Volume Flow Rate and calculate total volume since the last reset.

Note
The totalizer/inventory value will not automatically be reset when the source is changed. The user must manually reset the totalizer/inventory.

Tip
If you are using the API Referral application and you want to measure batch-weighted average density or batch-weighted average temperature, you must have a totalizer configured to measure temperature-corrected volume flow.

3. Set **Totalizer Direction** to specify how the totalizer or inventory will respond to forward or reverse flow.

Option	Flow direction	Totalizer and inventory behavior
Forward Only	Forward	Totals increment
	Reverse	Totals do not change
Reverse Only	Forward	Totals do not change
	Reverse	Totals increment
Bidirectional	Forward	Totals increment
	Reverse	Totals decrement
Absolute Value	Forward	Totals increment
	Reverse	Totals increment

Important

Actual flow direction interacts with **Sensor Flow Direction Arrow** to determine the flow direction that the transmitter uses in processing. See the following table.

Table 6-1: Interaction between actual flow direction and Sensor Flow Direction Arrow

Actual flow direction	Setting of Sensor Flow Direction Arrow	Flow direction sent to outputs and totalizers
Forward (same direction as Flow arrow on sensor)	With Arrow	Forward
	Against Arrow	Reverse
Reverse (opposite from Flow arrow on sensor)	With Arrow	Reverse
	Against Arrow	Forward

4. Optional: Set **User Name** to the name you want to use for the inventory or totalizer.

   User Name can have a maximum of 16 characters.

   The transmitter automatically generates a name for each totalizer and inventory, based on its source, direction, and type.

   Example

   - **Totalizer Source**=Mass Flow
   - **Totalizer Direction**=Forward Only
   - Totalizer name=`Mass Fwd Total`

   Example

   - **Inventory Source**=Gas Standard Volume Flow
   - **Inventory Direction**=Bidirectional
   - Inventory name = `GSV Bidir Inv`

   The specified name is used on the transmitter display and on all interfaces that support it. If **User Name** contains only spaces, the transmitter-generated name is used. Not all interfaces support totalizer and inventory names.

Example: Checking for backflow

You suspect that there is a significant amount of backflow through the sensor. To collect data, configure two totalizers as follows:

- **Source**=Mass Flow, **Direction**=Forward Only
- **Source**=Mass Flow, **Direction**=Reverse Only

Reset both totalizers, allow them to run for an appropriate period, then look at the amount of reverse flow as a percentage of forward flow.

Example: Tracking three different process fluids

Three tanks are connected to a loading dock through a single meter. Each tank contains a different process fluid. You want to track each process fluid separately.

1. Set up three totalizers, one for each tank.
2. Name the totalizers `Tank 1`, `Tank 2`, and `Tank 3`.
3. Configure each totalizer as required for the corresponding process fluid.
4. Stop and reset all three totalizers to ensure that the beginning values are 0.
5. When loading from a tank, start the corresponding totalizer, and stop it when the load is finished.

6.5.1 Default settings for totalizers and inventories

Totalizer or inventory	Source (process variable assignment	Direction	Name of totalizer Name of inventory
1	Mass flow	Forward Only	Mass Fwd Total Mass Fwd Inv
2	Volume flow	Forward Only	Volume Fwd Total Volume Fwd Inv
3	Temperature-corrected volume flow	Forward Only	API Volume Fwd Total API Volume Fwd Inv
4	Gas standard volume flow	Forward Only	GSV Fwd Total GSV Fwd Inv
5	Standard volume flow	Forward Only	Standard Vol Fwd Total Standard Vol Fwd Inv
6	Net mass flow	Forward Only	Net Mass Fwd Total Net Mass Fwd Inv
7	Net volume flow	Forward Only	Net Vol Fwd Total Net Vol Fwd Inv

6.6 Configure logging for totalizers and inventories

Display	**Menu → Configuration → Totalizer Log**
ProLink III	**Device Tools → Configuration → Totalizer Log**
Field communicator	Not available

The transmitter can write the current value of four totalizers or inventories to a log, at user-specified intervals. You can generate a log file from this data for viewing and analysis.

Procedure

1. Specify the date on which totalizer logging will begin.

   You must specify a future date. If you try to specify the current date, the transmitter will reject the setting.

2. Specify the time at which totalizer logging will begin.
3. Specify the number of hours between records.
4. Select up to four totalizers or inventories to be logged.

6.7 Configure Process Variable Fault Action

Display	**Menu → Configuration → Alert Setup → Output Fault Actions**
ProLink III	**Device Tools → Configuration → Fault Processing**
Field communicator	**Configure → Alert Setup → Output Fault Actions → Process Var Fault Action**

Process Variable Fault Action specifies the values that will be reported via the display and digital communications if the device encounters a fault condition. The values are also sent to the outputs for processing against their configured fault actions.

Procedure

Set **Process Variable Fault Action** as desired.

Default: None

Restriction

If you set **Process Variable Fault Action** to NAN, you cannot set **mA Output Fault Action** or **Frequency Output Fault Action** to None. If you try to do this, the transmitter will not accept the configuration.

Important

- If you want the mA Output to continue reporting process data during fault conditions, you must set both **Process Variable Fault Action** and **mA Output Fault Action** to **None**. If **mA Output Fault Action** is set to **None** and **Process Variable Fault Action** is set to any other option, the mA Output will produce the signal associated with the selection.
- If you want the Frequency Output to continue reporting process data during fault conditions, you must set both **Process Variable Fault Action** and **Frequency Output Fault Action** to **None**. If **Frequency Output Fault Action** is set to **None** and **Process Variable Fault Action** is set to any other option, the Frequency Output will produce the signal associated with the selection.

6.7.1 Options for Process Variable Fault Action

Label			Description
Display	**ProLink III**	**Field communicator**	
Upscale	Upscale	Upscale	• Process variable values indicate that the value is greater than the upper sensor limit. • Totalizers stop incrementing.
Downscale	Downscale	Downscale	• Process variable values indicate that the value is lower than the lower sensor limit. • Totalizers stop incrementing.
Zero	Zero	IntZero-All 0	• Flow rate variables go to the value that represents a flow rate of 0 (zero). • Density is reported as `0`. • Temperature is reported as `0 °C`, or the equivalent if other units are used (e.g., `32 °F`. • Drive gain is reported as measured. • Totalizers stop incrementing.
Not-a-Number (NAN)	Not a Number	Not-a-Number	• Process variables are reported as `IEEE NAN`. • Drive gain is reported as measured. • Modbus® scaled integers are reported as `Max Int`. • Totalizers stop incrementing.
Flow to Zero	Flow to Zero	IntZero-Flow 0	• Flow rates are reported as `0`. • Other process variables are reported as measured. • Totalizers stop incrementing.
None (default)	None	None (default)	• All process variables are reported as measured. • Totalizers increment if they are running.

6.7.2 Interaction between Process Variable Fault Action and other fault actions

The setting of **Process Variable Fault Action** affects the operation of the mA Outputs, Frequency Outputs, and Discrete Outputs if the corresponding output fault actions are set to None.

Interaction between Process Variable Fault Action and mA Output Fault Action

If **mA Output Fault Action** is set to None, the mA Output signal depends on the setting of **Process Variable Fault Action**.

If the device detects a fault condition:

1. **Process Variable Fault Action** is evaluated and applied.
2. **mA Output Fault Action** is evaluated.
   - If it is set to None, the output reports the value associated with the setting of **Process Variable Fault Action**.
   - If it is set to any other option, the output performs the specified fault action.

If you want the mA Output to continue to report process data during fault conditions, you must set both **mA Output Fault Action** and **Process Variable Fault Action** to None.

Interaction between Process Variable Fault Action and Frequency Output Fault Action

If **Frequency Output Fault Action** is set to None, the Frequency Output signal depends on the setting of **Process Variable Fault Action**.

If the device detects a fault condition:

1. **Process Variable Fault Action** is evaluated and applied.
2. **Frequency Output Fault Action** is evaluated.
   - If it is set to None, the output reports the value associated with the setting of **Process Variable Fault Action**.
   - If it is set to any other option, the output performs the specified fault action.

If you want the Frequency Output to continue to report process data during fault conditions, you must set both **Frequency Output Fault Action** and **Process Variable Fault Action** to None.

Interaction between Process Variable Fault Action and Discrete Output Fault Action

If **Discrete Output Fault Action** is set to None and **Discrete Output Source** is set to Flow Rate Switch, the Discrete Output state during a fault depends on the setting of **Process Variable Fault Action**.

If the device detects a fault condition:

1. **Process Variable Fault Action** is evaluated and applied.
2. **Discrete Output Fault Action** is evaluated.
   - If it is set to None, and **Discrete Output Source** is set to Flow Rate Switch, the Discrete Output will use the value determined by the current setting of **Process Variable Fault Action** to determine if a flow rate switch has occurred.

- If **Discrete Output Source** is set to any other option, the setting of **Process Variable Fault Action** is irrelevant to the behavior of the Discrete Output during fault conditions. The Discrete Output is set to the specified fault action.

If you want the Discrete Output to report a flow rate switch appropriately during fault conditions, you must set both **Discrete Output Fault Action** and **Process Variable Fault Action** to None.

7 Configure device options and preferences

7.1 Configure the transmitter display

You can control the language used on the display, the process variables shown on the display, and a variety of display behaviors.

7.1.1 Configure the language used on the display

Display	**Menu → Configuration → Display Settings → Language**
ProLink III	**Device Tools → Configuration → Local Display Settings → Transmitter Display → General → Language**
Field communicator	**Configure → Manual Setup → Display → Display Language → Language**

Language controls the language that the display uses for process data, menus, and information.

The languages available depend on your transmitter model and version.

Procedure

Set **Language** to the desired language.

7.1.2 Configure the process variables shown on the display

Display	**Menu → Configuration → Display Settings → Display Variables**
ProLink III	**Device Tools → Configuration → Transmitter Display → Display Variables**
Field communicator	**Configure → Manual Setup → Display → Display Variables**

You can control the process variables shown on the display and the order in which they appear. The display can scroll through up to 15 process variables in any order you choose. This configuration applies to both auto-scroll and manual scrolling.

By default, one process variable is shown at a time. You can configure a custom display screen that shows two process variables at a time.

Restriction

You cannot remove all display variables. At least one display variable must be configured.

Notes

- If you have a display variable configured to show a volume process variable, and you change **Volume Flow Type** to Gas Standard Volume, the display variable is automatically changed to the equivalent GSV variable, and vice versa.
- For all other display variables, if the process variable becomes unavailable due to changes in configuration, the transmitter will not display that variable.

Procedure

For each display variable, select the process variable to be shown in that position in the rotation.

You can skip positions and you can repeat process variables.

Table 7-1: Default configuration for display variables

Display variable	Process variable assignment
Display Variable 1	Mass flow rate
Display Variable 2	Mass total
Display Variable 3	Volume flow rate
Display Variable 4	Volume total
Display Variable 5	Density
Display Variable 6	Temperature
Display Variable 7	Drive gain
Display Variable 8	None
Display Variable 9	None
Display Variable 10	None
Display Variable 11	None
Display Variable 12	None
Display Variable 13	None
Display Variable 14	None
Display Variable 15	None

7.1.3 Configure a two-line display screen

Display	**Menu → Configuration → Display Settings → Display Variables → 2-Value View**
ProLink III	**Device Tools → Configuration → Transmitter Display → Display Variables → 2 PV Screen Slot #*X***
Field communicator	**Configure → Manual Setup → Display → Display Variables → Display: Two-Variable View**

You can configure one display screen to show two process variables at a time. For each of these process variables, the current value and the measurement is shown.

The two-line display screen operates like one of the basic 15 screens. You can use ˅ and ˄ to scroll to it. If Auto Scroll is enabled, the two-line screen will be the last screen in the cycle.

7.1.4 Configure the number of decimal places (precision) shown on the display

Display	**Menu → Configuration → Display Settings → Decimals on Display**
ProLink III	**Device Tools → Configuration → Transmitter Display → Display Variables → Decimal Places for x**
Field communicator	**Configure → Manual Setup → Display → Decimal Places**

You can specify the precision (the number of decimal places) that the display uses for each display variable. You can set the precision independently for each display variable.

The display precision does not affect the actual value of the variable, the value used in calculations, or the value reported via outputs or digital communications.

Procedure

1. Select a process variable or a diagnostic variable.

   You can configure the precision for all variables, whether or not they are assigned as display variables. The configured precision will be stored and used when applicable.

2. Set **Number of Decimal Places** to the number of decimal places to be used when this variable is shown on the display.
   - Default:
     - Temperature variables: 2
     - All other variables: 4
   - Range: 0 to 5

   Tip
   The lower the precision, the greater the change must be for it to be reflected on the display. Do not set **Number of Decimal Places** too low to be useful.

7.1.5 Turn on and turn off automatic scrolling through the display variables

Display	**Menu → Configuration → Display Settings → Auto Scroll**
ProLink III	**Device Tools → Configuration → Transmitter Display → General → Auto Scroll**
Field communicator	**Configure → Manual Setup → Display → Display Behavior → Auto Scroll**

You can configure the display to automatically scroll through the list of display variables or to show a single display variable until the operator activates **Scroll**. If **Auto Scroll** is turned on, you can configure the number of seconds that each display variable will be shown.

Procedure

1. Turn on or turn off **Auto Scroll** as desired.

Option	Description
On	The display automatically shows each display variable for the number of seconds specified by **Scroll Rate**, then shows the next display variable. The operator can move to the next display variable at any time by activating **Scroll**.
Off	The display shows Display Variable 1 and does not scroll automatically. The operator can move to the next display variable at any time by activating **Scroll**.

   Default: Off

2. If you turned on **Auto Scroll**, set **Scroll Rate** as desired.
   - Default: 10
   - Range: 1 to 30 seconds

Tip
Scroll Rate may not be available until you apply **Auto Scroll**.

7.1.6 Configure the display backlight

Display	**Menu → Configuration → Display Settings**
ProLink III	**Device Tools → Configuration → Transmitter Display → General → Backlight**
Field communicator	**Configure → Manual Setup → Display → Backlight**

You can control the intensity and contrast of the backlight on the display's LCD panel.

Procedure

1. Set **Intensity** as desired.
   - Default: 50
   - Range: 0 to 100
2. Set **Contrast** as desired.
   - Default: 50
   - Range: 0 to 100

7.1.7 Configure security for the display

Display	**Menu → Configuration → Security → Display Security**
ProLink III	**Device Tools → Configuration → Transmitter Display → Display Security**
Field communicator	**Configure → Manual Setup → Display → Display Menus**

When using the display, you can require users to enter a password to do any of the following tasks:

- Enter the main menu
- Change a parameter
- Access alert data through the display
- Start, stop, or reset totalizers or inventories via the context menu

The display password can be the same or different from the totalizer/inventory context menu control password. If different, the display password is used to reset, start, and stop totalizers or inventories using **Menu → Operations → Totalizers**.

Procedure

1. Configure **Password Required** as desired.

Option	Description
At Write	When an user chooses an action that leads to a configuration change, they are prompted to enter the display password.
Enter Menu	When the menu is selected from the process variable screen, the display password will be immediately required if **Password Required** is set.
Never (default)	When a user chooses an action that leads to a configuration change, they are prompted to activate ⇦⇧⇩⇨. This is designed to protect against accidental changes to configuration. It is not a security measure.

2. If the At Write or Enter Menu option was selected, enable or disable alert security as desired.

Option	Description
Enabled	If an alert is active, the alert symbol ⓘ is shown in the upper right corner of the display but the alert banner is not displayed. If the operator attempts to enter the alert menu, they are prompted to enter the display password.
Disabled	If an alert is active, the alert symbol ⓘ is shown in the upper right corner of the display and the alert banner is displayed automatically. No password or confirmation is required to enter the alert menu.

Restriction

You cannot set Password Required to Never and enable alert security.

- If you did not enable **Password Required**, alert security is disabled and cannot be enabled.
- Alert security is disabled automatically if you set **Password Required** to Never after:
  - **Password Required** is initially set to either At Write or Enter Menu
  - Alert security is enabled

3. If **Password Required** has been set to At Write or Enter Menu, you will be prompted to enter the desired password.
   - Default: AAAA
   - Range: Any four alphanumeric characters
   - **Password Required** must be set to At Write or Enter Menu to enable the totalizer/inventory control context menu password option.

Important

If you enable **Password Required** but you do not change the display password, the transmitter will post a configuration alert.

4. Configure **Main Menu Available** as desired.

Option	Description
Enabled	The local display **Menu** option from the process variable screen will be accessible.
Disabled	The local display **Menu** option from the process variable screen will not be accessible.

Important
Once **Main Menu Available** has been disabled, you cannot enable it from the local display. Use another configuration tool, such as ProLink III, to re-enable main menu access from the local display.

7.1.8 Configure totalizer and inventory control

Display	**Menu → Configuration → Security → Display Security → Totalizers & Inventories**
ProLink III	**Device Tools → Configuration → Totalizer Control Methods**
Field communicator	**Configure → Manual Setup → Display → Display Behavior**

You can enable or disable the operator's ability to start, stop, or reset totalizers or inventories. The totalizer/inventory control context menus password can also be configured. The context menu is accessed by selecting the options menu from the process variable screen when a total or inventory is displayed.

These parameters do not affect the operator's ability to start, stop, or reset totalizers or inventories using another tool.

Procedure

1. Enable or disable **Reset Totalizers**, as desired.
   Default = Enable
2. Enable or disable **Start/Stop Totalizers**, as desired.
   Default = Enable
3. Enable or disable **Reset Inventory**, as desired.
   Default = Disable
4. Enable or disable **Start/Stop Inventory**, as desired.
   Default = Disable
5. If required, configure the totalizer/inventory control context menu password.

Option	Description
No password (default)	Start, stop or reset totalizer/inventory actions via the context menu do not require a password.
Password Required	When a user selects **Start/Stop** or **Reset** from the context menu and the password is enabled for totalizer/inventory control, the user is required to enter a password before the action occurs.

If the context menu password option has been set to **Password Required**, you will be prompted to enter the password.

- Default: AAAA
- Range: Any four alphanumeric characters
- The display **Password Required** must be set to At Write or Enter Menu to enable the totalizer/inventory control context menu password option.

Important
If you enable **Password Required** for totalizers and inventories, but you do not change the password from the default, the transmitter will post a configuration alert.

7.2 Configure the transmitter's response to alerts

7.2.1 Configure the transmitter's response to alerts using the display

For some alerts, you can change the transmitter's response to an alert by setting the alert severity. You can also configure the transmitter to ignore some alerts and conditions.

The transmitter implements the NAMUR NE 107 specification for alerts. NAMUR NE 107 categorizes alerts by the suggested operator action, not by cause or symptom. Each alert has one or more associated conditions.

Important
The transmitter reports all the process and device conditions that were reported by previous transmitters. However, the transmitter does not report them as individual alerts. Instead, the transmitter reports them as conditions associated with alerts.

Procedure

- To change the severity of an alert:
  a) Choose **Menu** → **Configuration** → **Alert Setup** → **Response to Alerts**.
  b) Select the alert.
  c) Set **Alert Severity** as desired.

Option	Description
Failure	The event is serious enough to require fault actions by the transmitter. The event may be either device-related or process-related. Operator action is strongly recommended.
Function Check	Configuration change or device testing. No fault actions are performed. The operator may need to complete a procedure.
Out of Specification	The process is outside user-specified limits or device limits. No fault actions are performed. The operator should check the process.
Maintenance Required	Device maintenance is recommended, either near-term or mid-term.

- To ignore an alert:
  a) Choose **Menu** → **Configuration** → **Alert Setup** → **Response to Alerts**
  b) Select the alert.
  c) Set **Alert Detection** to Ignore.

  If an alert is ignored, any occurrence of this alert is not posted to the alert list and the status LED on the transmitter does not change color. The occurrence is posted to alert history.
- To ignore a condition:
  a) Choose **Menu** → **Configuration** → **Alert Setup** → **Response to Alerts**
  b) Select the alert associated with the condition.
  c) Select Condition Detection.
  d) Select the condition and set it to Ignore.

  If a condition is ignored, any occurrence of this condition is not posted to the alert list and the status LED on the transmitter does not change color. The occurrence is posted to alert history.

Related information

Alerts, conditions, and configuration options

7.2.2 Configure the transmitter's response to alerts using ProLink III

For some alerts, you can change the transmitter's response to an alert by setting the alert severity. You can also configure the transmitter to ignore some alerts and conditions.

The transmitter implements the NAMUR NE 107 specification for alerts. NAMUR NE 107 categorizes alerts by the suggested operator action, not by cause or symptom. Each alert has one or more associated conditions.

Important
The transmitter reports all the process and device conditions that were reported by previous transmitters. However, the transmitter does not report them as individual alerts. Instead, the transmitter reports them as conditions associated with alerts.

Procedure

- To change the severity of an alert:
  a) Choose **Device Tools** → **Configuration** → **Alert Severity**.
  b) Select the alert.
  c) Set the severity as desired.

Option	Description
Failure	The event is serious enough to require fault actions by the transmitter. The event may be either device-related or process-related. Operator action is strongly recommended.
Function Check	Configuration change or device testing. No fault actions are performed. The operator may need to complete a procedure.

Option	Description
Out of Specification	The process is outside user-specified limits or device limits. No fault actions are performed. The operator should check the process.
Maintenance Required	Device maintenance is recommended, either near-term or mid-term.

- To ignore an alert:
  a) Choose **Device Tools** → **Configuration** → **Alert Severity**.
  b) Select the alert.
  c) Set the severity to Ignore.

  If an alert is ignored, any occurrence of this alert is not posted to the alert list and the status LED on the transmitter does not change color. The occurrence is posted to alert history.
- To ignore a condition:
  a) Choose **Menu** → **Configuration** → **Alert Setup** → **Response to Alerts**.
  b) Select the alert associated with the condition and expand it.
  c) Select the condition and set it to Ignore.

  If a condition is ignored, any occurrence of this condition is not posted to the alert list and the status LED on the transmitter does not change color. The occurrence is posted to alert history.

Related information

Alerts, conditions, and configuration options

7.2.3 Configure the transmitter's response to alerts using a field communicator

For some alerts, you can change the transmitter's response to an alert by setting the alert severity. You can also configure the transmitter to ignore some alerts and conditions.

The transmitter implements the NAMUR NE 107 specification for alerts. NAMUR NE 107 categorizes alerts by the suggested operator action, not by cause or symptom. Each alert has one or more associated conditions.

Important
The transmitter reports all the process and device conditions that were reported by previous transmitters. However, the transmitter does not report them as individual alerts. Instead, the transmitter reports them as conditions associated with alerts.

Procedure

- To change the severity of an alert:
  a) Choose **Configure** → **Alert Setup**.
  b) Choose the category of the alert: Sensor, Configuration, Process, or Output.
  c) Select the alert.
  d) Set the severity as desired.

Option	Description
Failure	The event is serious enough to require fault actions by the transmitter. The event may be either device-related or process-related. Operator action is strongly recommended.
Function Check	Configuration change or device testing. No fault actions are performed. The operator may need to complete a procedure.
Out of Specification	The process is outside user-specified limits or device limits. No fault actions are performed. The operator should check the process.
Maintenance Required	Device maintenance is recommended, either near-term or mid-term.

- To ignore an alert:
  a) Choose **Configure** → **Alert Setup**.
  b) Choose the category of the alert: Sensor, Configuration, Process, or Output.
  c) Select the alert.
  d) Set the severity to No Effect.

  If an alert is ignored, any occurrence of this alert is not posted to the alert list and the status LED on the transmitter does not change color. The occurrence is posted to alert history.
- To ignore a condition:
  a) Choose **Configure** → **Alert Setup**.
  b) Choose the category of the alert: Sensor, Configuration, Process, or Output.
  c) Select the alert.
  d) Choose **Set Conditions**.
  e) Select the condition and set it to OFF.

  If a condition is ignored, any occurrence of this condition is not posted to the alert list and the status LED on the transmitter does not change color. The occurrence is posted to alert history.

7.2.4 Configure Fault Timeout

Display	**Menu → Alert Setup → Output Fault Actions → Fault Timeout (sec)**
ProLink III	**Device Tools → Configuration → Fault Processing → Fault Timeout**
Field communicator	**Configure → Alert Setup → Output Fault Actions → General → Fault Timeout**

Fault Timeout controls the delay before fault actions are performed.

The fault timeout period begins when the transmitter detects an alert condition.

- During the fault timeout period, the transmitter continues to report its last valid measurements.
- If the fault timeout period expires while the alert is still active, the fault actions are performed.
- If the alert condition clears before the fault timeout expires, no fault actions are performed.

Restriction

- **Fault Timeout** is not applied to all alerts. For some alerts, fault actions are performed as soon as the alert condition is detected. See the list of alerts and conditions for details.
- **Fault Timeout** is applicable only when **Alert Severity** = Failure. For all other settings of **Alert Severity**, **Fault Timeout** is irrelevant.

Procedure

Set **Fault Timeout** as desired.

- Default: 0 seconds
- Range: 0 to 60 seconds

If you set **Fault Timeout** to 0, fault actions are performed as soon as the alert condition is detected.

Related information

Alerts, conditions, and configuration options

7.2.5 Alerts, conditions, and configuration options

For more information on these alerts, see Status alerts, causes, and recommendations.

Configuration Error

Default severity: Failure
Severity configurable: No
Fault Timeout applicable: No

Table 7-2: Configuration Error conditions

Name	Ignorable
[020] Calibration Factors Missing	No
[021] Incorrect Sensor Type	Yes
[030] Incorrect Board Type	No
Core Processor Update Failed	Yes
Password Not Set	No
Time Not Entered	Yes
Batcher Not Configured	Yes
[120] Curve Fit Failure (Concentration)	No

Core Low Power

Default severity: Failure
Severity configurable: No
Fault Timeout applicable: No

Table 7-3: Core Low Power conditions

Name	Ignorable
[031] Low Power	No

Configuration Warning

Default severity: Maintenance Required
Severity configurable: Yes
Fault Timeout applicable: No

Table 7-4: Configuration Warning conditions

Name	Ignorable
[103] Configuration Warning	Yes
SD Card Failure	No
No Permanent License	No
Clock Failure	No
SD Card Full	No
Transmitter Software Update Failed	Yes

Drive Over Range

Default severity: Maintenance
Severity configurable: Yes
Fault Timeout applicable: Yes

Table 7-5: Drive Over-Range conditions

Name	Ignorable
[102] Drive Overrange	Yes

Electronics Failed

Default severity: Failure
Severity configurable: No
Fault Timeout applicable: No

Table 7-6: Electronics Failed conditions

Name	Ignorable
[002] RAM Error (Core Processor)	No
[018] EEPROM Error (Transmitter)	No
[019] RAM Error (Transmitter)	No
[022] Configuration Database Corrupt (Core Processor)	No
[024] Program Corrupt (Core Processor)	No
Watchdog Error	No

Table 7-6: Electronics Failed conditions *(continued)*

Name	Ignorable
Verification of mA Output 1 Failed	No

Event Active

Default severity: Out of Speculation
Severity configurable: Yes
Fault Timeout applicable: Yes

Table 7-7: Event Active conditions

Name	Ignorable
Enhanced Event [1 - 5] Active	Yes
Event [1 - 2] Active	Yes

Extreme Primary Purpose Variable

Default severity: Failure
Severity configurable: Yes
Fault Timeout applicable: Yes

Table 7-8: Extreme Primary Purpose Variable conditions

Name	Ignorable
[005] Mass Flow Rate Overrange	No
[008] Density Overrange	No

Function Check Failed or Smart Meter Verification Aborted

Default severity: Maintenance Required
Severity configurable: Yes
Fault Timeout applicable: No

Table 7-9: Function Check Failed or Smart Meter Verification Aborted conditions

Name	Ignorable
[010] Calibration Failed	No
[034] Smart Meter Verification Failed	Yes
[035] Smart Meter Verification Aborted	Yes

Function Check in Progress

Default severity: Function Check
Severity configurable: No
Fault Timeout applicable: No

Table 7-10: Function Check in Progress conditions

Name	Ignorable
[104] Calibration in Progress	No
[131] Smart Meter Verification in Progress	Yes

Output Fixed

Default severity: Function Check
Severity configurable: Yes
Fault Timeout applicable: No

Table 7-11: Output Fixed conditions

Name	Ignorable
[101] mA Output 1 Fixed	Yes
[111] Frequency Output 1 Fixed	No
[114] mA Output 2 Fixed	No
[118] Discrete Output 1 Fixed	No
[119] Discrete Output 2 Fixed	No
Frequency Output 2 Fixed	No
mA Output 2 Fixed	No

Output Saturated

Default severity: Out of Speculation
Severity configurable: Yes
Fault Timeout applicable: No

Table 7-12: Output Saturated conditions

Name	Ignorable
[100] mA Output 1 Saturated	Yes
[110] Frequency Output 1 Saturated	Yes
[113] mA Output 2 Saturated	Yes
Frequency Output 2 Saturated	Yes
mA Output 3 Saturated	Yes

Process Aberration

Default severity: Out of Speculation
Severity configurable: Yes
Fault Timeout applicable: Yes

Table 7-13: Process Aberration conditions

Name	Ignorable
[105] Two-Phase Flow	Yes
[115] External Input Error	Yes
[116] Temperature Overrange (API Referral)	Yes
[117] Density Overrange (API Referral)	Yes
[121] Extrapolation Alert (Concentration)	Yes
[123] Pressure Overrange (API Referral)	Yes
[138] TBR Active	Yes
Batch Time Out	Yes
Moderate Two-Phase Flow	Yes
Severe Two-Phase Flow	Yes

Sensor Being Simulated

Default severity: Function Check
Severity configurable: No
Fault Timeout applicable: No

Table 7-14: Sensor Being Simulated conditions

Name	Ignorable
[132] Sensor Simulation Active	No

Sensor Failed

Default severity: Failure
Severity configurable: No
Fault Timeout applicable: Yes

Table 7-15: Sensor Failed conditions

Name	Ignorable
[003] Sensor Failed	No
[016] Sensor Temperature (RTD) Failure	No
[017] Sensor Case Temperature (RTD) Failure	No

Sensor-Transmitter Communication Error

Default severity: Failure
Severity configurable: No
Fault Timeout applicable: Yes

Table 7-16: Sensor-Transmitter Communication Error conditions

Name	Ignorable
[026] Sensor/Transmitter Communications Failure	No
[028] Core Process Write Failure	No

Transmitter Initializing

Default severity: Failure
Severity configurable: No
Fault Timeout applicable: No

Table 7-17: Transmitter Initializing conditions

Name	Ignorable
[009] Transmitter Initializing/Warming Up	No

Tube Not Full

Default severity: Failure
Severity configurable: Yes
Fault Timeout applicable: Yes

Table 7-18: Tube Not Full conditions

Name	Ignorable
[033] Insufficient Pickoff Signal	Yes

7.3 Control button sensitivity on the display

Display	**Menu → Configuration → Yes → Display Settings → Button Sensitivity**

You can configure the button sensitivity for each button (right, left, up, down) from the 200 default level to a range of 187 to 225, where the lower number signifies lower sensitivity.

8 Integrate the meter with the control system

8.1 Configure the transmitter channels

Display	**Menu** → **Configuration** → **Inputs/Outputs** → **Channel** *x*
ProLink III	**Device Tools** → **Configuration** → **I/O** → **Channels** → **Channel** *x*
Field communicator	**Configure** → **Manual Setup** → **Inputs/Outputs** → **Channel** *x*

Your transmitter uses Channels A, B, C, and D to support the control system and communications. Channels C and D are configurable.

Depending on your purchase order, some channels may not be activated on your device. To see which channels are activated:

- Using the display: **Menu** → **About** → **Licenses**
- Using ProLink III: **Device Information**
- Using a field communicator: **Overview** → **Device Information** → **Licenses** → **Permanent Feature Set** → **Input/Output Channels**

To activate additional channels, contact customer service.

Important
The channel configuration must match the I/O wiring.

Prerequisites

Plan your channel assignments before configuring channels. Not all combinations are supported. For example:

- You cannot have two Discrete Outputs and a Frequency Output.

For details, see Channel combinations.

If you plan to use dual-pulse mode, configure Channel C as Frequency Output 1, and Channel D as Frequency Output 2.

Important
To avoid causing process errors:

- Configure the channels before configuring the outputs.
- Before changing the channel configuration, ensure that all control loops affected by the channel are under manual control.

Procedure

1. Identify the channels that are activated on your device.
2. For Channel C and Channel D, if activated, set **Channel Type** as desired.

Channel	Options
Channel C	• mA Output 3 • Frequency Output 1 (default) • Discrete Output 1
Channel D	• Frequency Output 2 • Discrete Output 2 (default)

Restriction
You cannot configure **Channel Type** for Channel A and Channel B. Channel A is always mA Output 1. Channel B is always mA Output 2.

Postrequisites

For each channel that you configured, perform or verify the corresponding output configuration. When the configuration of a channel is changed, the channel's behavior will be controlled by the configuration that is stored for the selected output type, and the stored configuration may not be appropriate for your process.

After verifying channel and output configuration, return the control loop to automatic control.

8.2 Configure an mA Output

Use an mA Output to report current values of process variables. The mA signal varies between 4 mA and 20 mA in proportion to the current value of the assigned process variable.

Depending on your purchase order and channel configuration, your transmitter may have 1-2 mA Outputs. Channel A is always mA Output 1, and Channel B is always mA Output 2.

Note
Channel A also supports HART/Bell 202 communications, superimposed on the mA signal. HART is not available on Channel B or Channel C.

8.2.1 Configure mA Output Source

Display	**Menu → Configuration → Inputs/Outputs → Channel *x* → I/O Settings → Source**
ProLink III	**Device Tools → Configuration → I/O → Outputs → mA Output *x***
Field communicator	**Configure → Manual Setup → Inputs/Outputs → Channel *x* → mA Output *x* → mAO*x*Source**

mA Output Source specifies the process variable that is reported by the mA Output.

Prerequisites

- If you plan to configure the output to report volume flow, ensure that you have set **Volume Flow Type** as desired: Liquid or Gas Standard Volume.
- If you plan to configure an output to report a concentration measurement process variable, API Referral, or Advance Phase Measurement process variable, ensure that the concentration measurement application, API Referral, or Advance Phase Measurement application respectively, is configured so that the desired variable is available.

- If you are using the HART variables, be aware that changing the configuration of **mA Output 1 Source** will change the configuration of the HART Primary Variable (PV).

Note
mA Output 2 Source is not tied to the HART secondary variable. You can configure these independently. This is different from previous Micro Motion Coriolis transmitters.

Procedure

Set **mA Output Process Variable** as desired.

Defaults:

- mA Output 1: Mass Flow Rate
- mA Output 2: Density

Postrequisites

If you change the configuration of **mA Output Source**, verify the settings of **Lower Range Value** and **Upper Range Value**. The transmitter automatically loads a set of values, and these values may not be appropriate for your application.

Related information

Configure Lower Range Value (LRV) and Upper Range Value (URV) for the mA Output
Configure HART variables (PV, SV, TV, QV)

Options for mA Output Source

The transmitter provides a basic set of options for **mA Output Source**, plus several application-specific options. Different communications tools may use different labels for the options.

Process variable	Label		
	Display	**ProLink III**	**Field communicator**
Standard			
Mass flow rate	Mass Flow Rate	Mass Flow Rate	Mass Flow Rate
Volume flow rate	Volume Flow Rate	Volume Flow Rate	Volume Flow Rate
Gas standard volume flow rate	GSV Flow Rate	Gas Standard Volume Flow Rate	Gas Standard Volume Flow
Temperature	Temperature	Temperature	Temperature
Density	Density	Density	Density
External pressure	External Pressure	External Pressure	External pressure
External temperature	External Temperature	External Temperature	External temperature
Diagnostics			
Velocity	Velocity	Velocity	Approximate Velocity
Two-phase flow detection	Phase	Phase Flow Severity	Two-Phase Flow Detection
Drive gain	Drive Gain	Drive Gain	Drive Gain

Process variable	Label		
	Display	**ProLink III**	**Field communicator**
API Referral			
Temperature-corrected density	Referred Density	Density at Reference Temperature	Density at Reference Temperature
Temperature-corrected (standard) volume flow rate	Referred Volume Flow	Volume Flow Rate at Reference Temperature	Referred Volume Flow Rate
Average temperature-corrected density	Average Line Density	Average Density	Average Observed Density
Average temperature	Average Temperature	Average Temperature	Average Temperature
Concentration measurement			
Density at reference	Referred Density	Density at Reference Temperature	Dens at Ref (CM)
Specific gravity	Specific Gravity	Density (Fixed SG Units)	Spec Gravity (CM)
Standard volume flow rate	Standard Vol Flow	Volume Flow Rate at Reference Temperature	Standard Volume Flow Rate
Net mass flow rate	Net Mass Flow	Net Mass Flow Rate	Net Mass Flow (CM)
Net volume flow rate	Net Volume Flow Rate	Net Volume Flow Rate	Net Volume Flow Rate (CM)
Concentration	Concentration	Concentration	Concentration (CM)
Baume	Baume	Baume	Baume (CM)
Batching			
% of batch delivered	% of Fill	% of Fill Delivered	% of Fill Delivered

8.2.2 Configure Lower Range Value (LRV) and Upper Range Value (URV) for the mA Output

Display	**Menu → Configuration → Inputs/Outputs → Channel *x* → I/O Settings → Lower Range Value** **Menu → Configuration → Inputs/Outputs → Channel *x* → I/O Settings → Upper Range Value**
ProLink III	**Device Tools → Configuration → I/O → Outputs → mA Output → Lower Range Value** **Device Tools → Configuration → I/O → Outputs → mA Output → Upper Range Value**
Field communicator	**Configure → Manual Setup → Inputs/Outputs → Channel *x* → mA Output *x* → mA Output *x*Settings → Lower Range Value** **Configure → Manual Setup → Inputs/Outputs → Channel *x* → mA Output *x* → mA Output *x*Settings → Upper Range Value**

The **Lower Range Value** (LRV) and **Upper Range Value** (URV) are used to scale the mA Output, that is, to define the relationship between **mA Output Process Variable** and the mA Output signal.

LRV is the value of **mA Output Source** represented by an output of 4 mA. **URV** is the value of **mA Output Source** represented by an output of 20 mA. Between **LRV** and **URV**, the mA Output is linear with the process variable. If the process variable drops below **LRV** or rises above **URV**, the transmitter posts an output saturation alert.

Procedure

Set **LRV** and **URV** as desired.

Enter **LRV** and **URV** in the measurement units used for **mA Output Source**.

- Defaults: Specific to each process variable
- Range: Unlimited

Note
You can set **URV** below **LRV**. For example, you can set **URV** to `50` and **LRV** to `100`. If you do this, the mA Output will be inversely proportional to the value of **mA Output Source**.

8.2.3 Configure mA Output Direction

Display	**Menu → Configuration → Inputs/Outputs → Channel *x* → I/O Settings → Direction**
ProLink III	**Device Tools → Configuration → I/O → Outputs → mA Output *x* → Direction**
Field communicator	**Configure → Manual Setup → Inputs/Outputs → Channel *x* → mA Output *x* → mAO*x* Fault Settings → mAO*x* Direction**

mA Output Direction controls how conditions of forward flow and reverse flow affect the flow rates reported by the mA Output.

Actual flow direction interacts with **Sensor Flow Direction Arrow** to determine the flow direction that the transmitter uses in processing. See the following table.

Table 8-1: Interaction between actual flow direction and Sensor Flow Direction Arrow

Actual flow direction	Setting of Sensor Flow Direction Arrow	Flow direction sent to outputs and totalizers
Forward (same direction as Flow arrow on sensor)	With Arrow	Forward
	Against Arrow	Reverse
Reverse (opposite from Flow arrow on sensor)	With Arrow	Reverse
	Against Arrow	Forward

Procedure

Set **mA Output Direction** as desired.

Option	Description
Normal (default)	Appropriate when your application needs to distinguish between forward flow and reverse flow.
Absolute Value	Appropriate when your application does not need to distinguish between forward flow and reverse flow.

Important
mA Output Direction interacts with **Lower Range Value** (LRV). The effect of **mA Output Direction** on the mA Output varies, depending on whether LRV < 0 or LRV ≥ 0.

Related information

Configure Sensor Flow Direction Arrow

Effect of mA Output Direction on an mA Output

mA Output Direction affects how the transmitter reports flow values via an mA Output. An mA Output is affected by **mA Output Direction** only if **mA Output Source** is set to a flow variable.

The effect of **mA Output Direction** depends on the setting of **Lower Range Value** (LRV).

- If **Lower Range Value** = 0, see Figure 8-1.
- If **Lower Range Value** > 0, see Figure 8-1 and adapt the chart.
- If **Lower Range Value** < 0, see Figure 8-2.

Figure 8-1: Effect of mA Output Direction on an mA Output: Lower Range Value = 0

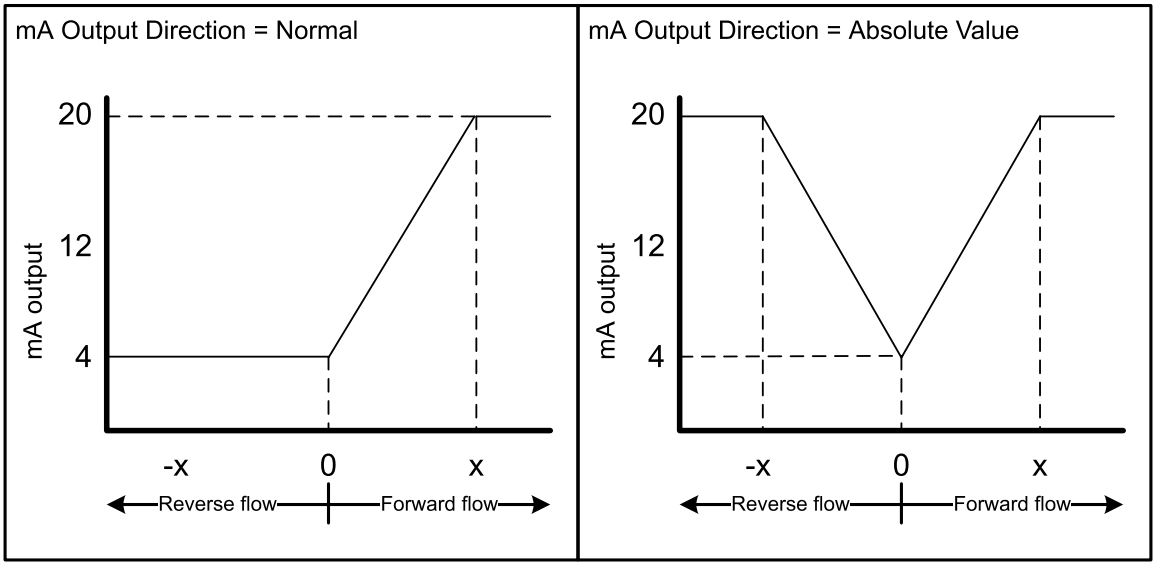

- **Lower Range Value** = 0
- **Upper Range Value** = x

Figure 8-2: Effect of mA Output Direction on an mA Output: Lower Range Value < 0

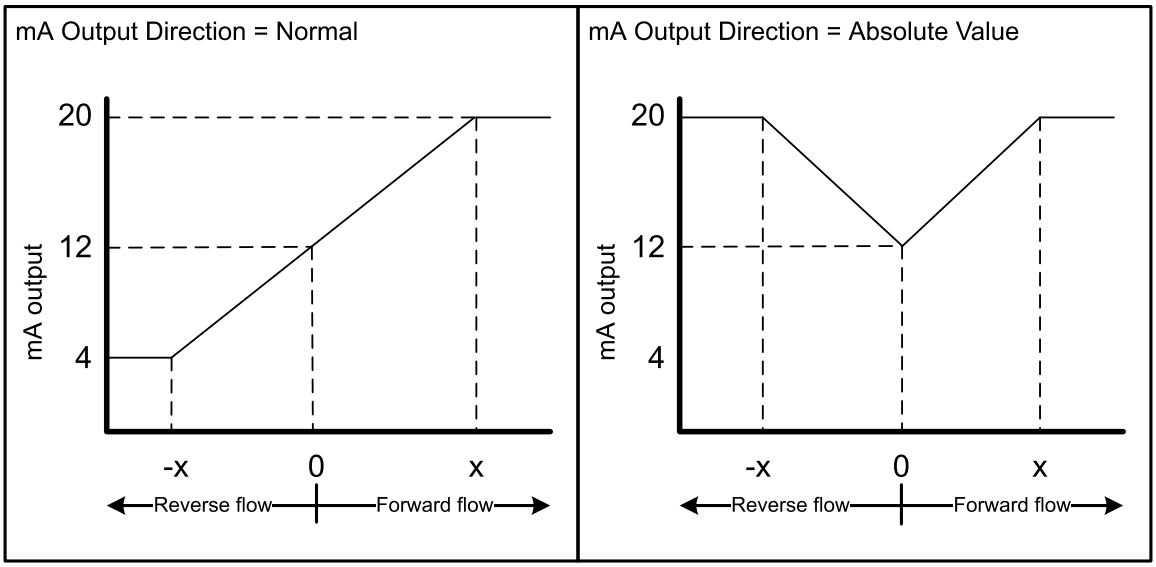

- **Lower Range Value** = −x
- **Upper Range Value** = x

Example: mA Output Direction = Normal and Lower Range Value = 0

Configuration:

- **mA Output Direction** = Normal
- **Lower Range Value** = 0 g/sec
- **Upper Range Value** = 100 g/sec

Result:

- Under conditions of reverse flow or zero flow, the mA Output is 4 mA.
- Under conditions of forward flow, up to a flow rate of 100 g/sec, the mA Output varies between 4 mA and 20 mA in proportion to the flow rate.
- Under conditions of forward flow, if the flow rate equals or exceeds 100 g/sec, the mA Output will be proportional to the flow rate up to 20.5 mA, and will be level at 20.5 mA at higher flow rates.

Example: mA Output Direction = **Normal and** Lower Range Value **< 0**

Configuration:

- **mA Output Direction** = Normal
- **Lower Range Value** = −100 g/sec
- **Upper Range Value** = +100 g/sec

Result:

- Under conditions of zero flow, the mA Output is 12 mA.
- Under conditions of forward flow, for flow rates between 0 and +100 g/sec, the mA Output varies between 12 mA and 20 mA in proportion to (the absolute value of) the flow rate.
- Under conditions of forward flow, if (the absolute value of) the flow rate equals or exceeds 100 g/sec, the mA Output is proportional to the flow rate up to 20.5 mA, and will be level at 20.5 mA at higher flow rates.
- Under conditions of reverse flow, for flow rates between 0 and −100 g/sec, the mA Output varies between 4 mA and 12 mA in inverse proportion to the absolute value of the flow rate.
- Under conditions of reverse flow, if the absolute value of the flow rate equals or exceeds 100 g/sec, the mA Output is inversely proportional to the flow rate down to 3.8 mA, and will be level at 3.8 mA at higher absolute values.

8.2.4 Configure mA Output Cutoff

Display	**Menu → Configuration → Inputs/Outputs → Channel *x* → I/O Settings → MAO Cutoff**
ProLink III	**Device Tools → Configuration → I/O → Outputs → mA Output *x* → Flow Rate Cutoff**
Field communicator	**Configure → Manual Setup → Inputs/Outputs → Channel *x* → mA Output *x* → mA Output *x* Settings → mAO Flow Rate Cutoff**

mA Output Cutoff specifies the lowest flow rate that will be reported through the mA Output. All flow rates below the specified value are reported as 0.

mA Output Cutoff is applicable only when **mA Output Source** is set to a flow rate variable. It is applied to whatever flow variable is assigned to the mA Output.

Procedure

Set **mA Output Cutoff** as desired.

Set **mA Output Cutoff** in the measurement units used for the process variable. If you change the measurement unit, **mA Output Cutoff** is adjusted automatically.

- Default: 0
- Range: 0 or any positive value

Tip
For most applications the default value of **mA Output Cutoff** should be used. Contact customer service before changing **mA Output Cutoff**.

Interaction between mA Output Cutoff and process variable cutoffs

When **mA Output Process Variable** is set to a flow variable (for example, mass flow rate or volume flow rate), **mA Output Cutoff** interacts with **Mass Flow Cutoff** or **Volume Flow Cutoff**. The transmitter puts the cutoff into effect at the highest flow rate at which a cutoff is applicable.

Example: Cutoff interaction

Configuration:

- **mA Output Source** = Mass Flow Rate
- **Frequency Output Source** = Mass Flow Rate
- **mA Output Cutoff** = `10` g/sec
- **Mass Flow Cutoff** = `15` g/sec

Result: If the mass flow rate drops below 15 g/sec, all outputs representing mass flow will report zero flow.

Example: Cutoff interaction

Configuration:

- **mA Output Source** = Mass Flow Rate
- **Frequency Output Source** = Mass Flow Rate
- **mA Output Cutoff** = `15` g/sec
- **Mass Flow Cutoff** = `10` g/sec

Result:

- If the mass flow rate drops below 15 g/sec but not below 10 g/sec:
  - The mA Output will report zero flow.
  - The Frequency Output will report the actual flow rate.
- If the mass flow rate drops below 10 g/sec, both outputs will report zero flow.

8.2.5 Configure mA Output Damping

Display	**Menu → Configuration → Inputs/Outputs → Channel *x* → I/O Settings → MAO Damping**
ProLink III	**Device Tools → Configuration → I/O → Outputs → mA Output *x* → Added Damping**
Field communicator	**Configure → Manual Setup → Inputs/Outputs → Channel *x* → mA Output *x* → mA Output *x* Settings → Added Damping**

mA Output Damping controls the amount of damping that will be applied to the mA Output.

Damping is used to smooth out small, rapid fluctuations in process measurement. The damping value specifies the time period, in seconds, over which the transmitter will spread changes in the process variable. At the end of the interval, the value reported by the mA Output will reflect 63% of the change in the actual measured value.

mA Output Damping affects a process variable only when it is reported via the mA Output. If the process variable is read from the display or digitally, **mA Output Damping** is not applied.

Procedure

Set **mA Output Damping** to the desired value.

- Default: 0.0 seconds
- Range: 0.0 to 440 seconds

Tip

- A high damping value makes the process variable appear smoother because the reported value changes slowly.
- A low damping value makes the process variable appear more erratic because the reported value changes more quickly.
- The combination of a high damping value and rapid, large changes in the process variable assigned to the mA Output can result in increased measurement error.
- Whenever the damping value is non-zero, the damped value will lag the actual measurement because the damped value is being averaged over time.
- In general, lower damping values are preferable because there is less chance of data loss, and less lag time between the actual measurement and the damped value.

Interaction between mA Output Damping and process variable damping

When **mA Output Source** is set to a flow rate variable, density, or temperature, **mA Output Damping** interacts with **Flow Damping**, **Density Damping**, or **Temperature Damping**. If multiple damping parameters are applicable, the effect of damping the process variable is calculated first, and the mA Output damping calculation is applied to the result of that calculation.

Example: Damping interaction

Configuration:

- **Flow Damping** = 1 second
- **mA Output Source** = Mass Flow Rate
- **mA Output Damping** = 2 seconds

Result: A change in the mass flow rate will be reflected in the mA Output over a time period that is greater than 3 seconds. The exact time period is calculated by the transmitter according to internal algorithms which are not configurable.

8.2.6 Configure mA Output Fault Action

Display	**Menu → Configuration → Inputs/Outputs → Channel *x* → I/O Settings → Fault Action**
ProLink III	**Device Tools → Configuration → I/O → Outputs → mA Output *x* → Fault Action**
Field communicator	**Configure → Manual Setup → Inputs/Outputs → Channel *x* → mA Output *x* → mAO*x*Fault Settings → mAO*x* Fault Action**

mA Output Fault Action controls the behavior of the mA Output if the transmitter detects a fault condition.

Important

- The fault action is implemented only if **Alert Severity** is set to Failure. If **Alert Severity** is set to any other option, the fault action is not implemented.
- For some faults only: If **Fault Timeout** is set to a non-zero value, the transmitter will not implement the fault action until the timeout has elapsed.

Procedure

1. Set **mA Output Fault Action** as desired.

   Default: Downscale

   Important
   If you set **mA Output Fault Action** to None, the mA Output will be controlled by the setting of **Process Variable Fault Action**. In most cases, if you set **mA Output Fault Action** to None, you should also set **Process Variable Fault Action** to None.

2. If you set **mA Output Fault Action** to **Upscale** or **Downscale**, set **mA Output Fault Level** to the signal that the mA Output will produce during a fault.

Related information

Configure Process Variable Fault Action
Interaction between Process Variable Fault Action and other fault actions

Options for mAO Fault Action and mAO Fault Level

Option	mA Output behavior	mA Output Fault Level
Upscale	Goes to the configured fault level	Default: 22.0 mA Range: 21.0 to 23.0 mA
Downscale (default)	Goes to the configured fault level	Default: 3.2 mA Range: 3.2 mA to 3.6 mA
Internal Zero	Goes to the mA Output level associated with a process variable value of 0 (zero), as determined by **Lower Range Value** and **Upper Range Value** settings	Not applicable
None	Determined by the setting of **Process Variable Fault Action**	Not applicable

8.3 Configure a Frequency Output

Use a Frequency Output to report current values of process variables. The frequency varies between 0 Hz and 14500 Hz in proportion to the current value of the assigned process variable.

8.3.1 Configure Frequency Output Source

Display	**Menu → Configuration → Inputs/Outputs → Channel *x* → I/O Settings → Source**
ProLink III	**Device Tools → Configuration → I/O → Outputs → Frequency Output *x***
Field communicator	**Configure → Manual Setup → Inputs/Outputs → Channel *x* → Frequency Output *x***

Frequency Output Source specifies the process variable that is reported by the Frequency Output.

Important

Frequency Outputs on the 5700 transmitter are different from Frequency Outputs on previous Micro Motion Coriolis transmitters:

- **Frequency Output Source** is not tied to the HART third variable. You can configure these independently.
- **Frequency Output Source** can be configured independently for Frequency Output 1 and Frequency Output 2.

Prerequisites

- If you plan to configure the output to report volume flow, ensure that you have set **Volume Flow Type** as desired: Liquid or Gas Standard Volume.
- If you plan to configure an output to report a concentration measurement process variable, ensure that the concentration measurement application is configured so that the desired variable is available.

Procedure

Set **Frequency Output Source** as desired.

Defaults:

- Frequency Output 1: Mass Flow Rate
- Frequency Output 2: Mass Flow Rate

Postrequisites

If you change the configuration of **Frequency Output Source**, verify the Frequency Output scaling. The transmitter automatically loads the most recent values for the scaling parameters, and they may not be appropriate for your application.

Related information

Configure Frequency Output Scaling

Options for Frequency Output Source

The transmitter provides a basic set of options for **Frequency Output Source**, plus several application-specific options. Different communications tools may use different labels for the options.

Process variable	Label		
	Display	**PLIII**	**Field communicator**
Standard			
Mass flow rate	Mass Flow Rate	Mass Flow Rate	Mass Flow Rate
Volume flow rate	Volume Flow Rate	Volume Flow Rate	Volume Flow Rate
Gas standard volume flow rate	GSV Flow Rate	Gas Standard Volume Flow Rate	GSV Flow Rate
API referral			
Temperature-corrected (standard) volume flow rate	Referred Volume Flow	Volume Flow Rate at Reference Temperature	Referred Volume Flow Rate
Concentration measurement			
Standard volume flow rate	Standard Vol Flow	Volume Flow Rate at Reference Temperature	Standard Volume Flow Rate
Net mass flow rate	Net Mass Flow	Net Mass Flow Rate	Net Mass Flow (CM)
Net volume flow rate	Net Volume Flow Rate	Net Volume Flow Rate	Net Volume Flow Rate (CM)

8.3.2 Configure Frequency Output Scaling

Display	**Menu → Configuration → Inputs/Outputs → Channel x → Frequency Output x → Scaling Method**
ProLink III	**Device Tools → Configuration → I/O → Outputs → Frequency Output x → Scaling Method**
Field communicator	**Configure → Manual Setup → Inputs/Outputs → Channel *x* → Frequency Output *x* → FO*x*Scaling**

Frequency output scaling defines the relationship between **Frequency Output Source** and the pulse of the Frequency Output. Scale the Frequency Output to provide the data in the form required by your frequency receiving device.

Procedure

1. Set **Frequency Output Scaling Method**.

Option	Description
Frequency=Flow (default)	Frequency calculated from flow rate
Pulses/Unit	A user-specified number of pulses represents one flow unit
Units/Pulse	A pulse represents a user-specified number of flow units

2. Set additional required parameters.
   - If you set **Frequency Output Scaling Method** to Frequency=Flow, set **Rate Factor** and **Frequency Factor**.

- If you set **Frequency Output Scaling Method** to Pulses/Unit, define the number of pulses that will represent one flow unit.
- If you set **Frequency Output Scaling Method** to Units/Pulse, define the number of units that each pulse will indicate.

Calculate frequency from flow rate

The Frequency=Flow option is used to customize the Frequency Output for your application when you do not know appropriate values for Units/Pulse or Pulses/Unit.

If you specify Frequency=Flow, you must provide values for **Rate Factor** and **Frequency Factor**:

Rate Factor The maximum flow rate that you want the Frequency Output to report.

Frequency Factor A value calculated as follows:

$$FrequencyFactor\ \frac{RateFactor}{T}\ \times\ N$$

where:

T Factor to convert selected time base to seconds

N Number of pulses per flow unit, as configured in the receiving device

The resulting **Frequency Factor** must be within the range of the Frequency Output :

- If **Frequency Factor** is less than 1 Hz, reconfigure the receiving device for a higher pulses/unit setting.

Example: Configure Frequency=Flow

You want the Frequency Output to report all flow rates up to 2000 kg/min.

The frequency receiving device is configured for 10 pulses/kg.

Solution:

$$FrequencyFactor\ \frac{RateFactor}{T}\ \times\ N$$

$$FrequencyFactor\ \frac{2000}{60}\ \times\ 10$$

$$FrequencyFactor\ =\ 333.33$$

Set parameters as follows:

- **Rate Factor**: `2000`
- **Frequency Factor**: `333.33`

8.3.3 Configure Frequency Output Direction

Display	**Menu → Configuration → Inputs/Outputs → Channel x → I/O Settings → Direction**
ProLink III	**Device Tools → Configuration → I/O → Outputs → Frequency Output x → Direction**
Field communicator	**Configure → Manual Setup → Inputs/Outputs → Channel *x* → Frequency Output *x* → FO*x*Settings**

Frequency Output Direction controls how conditions of forward flow and reverse flow affect the flow rates reported by the Frequency Output.

Actual flow direction interacts with **Sensor Flow Direction Arrow** to determine the flow direction that the transmitter uses in processing. See the following table.

Table 8-2: Interaction between actual flow direction and Sensor Flow Direction Arrow

Actual flow direction	Setting of Sensor Flow Direction Arrow	Flow direction sent to outputs and totalizers
Forward (same direction as Flow arrow on sensor)	With Arrow	Forward
	Against Arrow	Reverse
Reverse (opposite from Flow arrow on sensor)	With Arrow	Reverse
	Against Arrow	Forward

Procedure

Set **Frequency Output Direction** as desired.

Option	Description
Positive Flow Only	• Forward flow: The Frequency Output reports the flow rate according to the configured scaling method. • Reverse flow: The Frequency Output is 0 Hz.
Negative Flow Only	• Forward flow: The Frequency Output is 0 Hz. • Reverse flow: The Frequency Output reports the absolute value of the flow rate according to the configured scaling method.
Both Positive and Negative Flow	The Frequency Output reports the absolute value of the flow rate according to the configured scaling method. It is not possible to distinguish between forward flow and reverse flow from the Frequency Output alone. This setting is typically used in combination with a discrete output configured to report flow direction.

Related information

Configure Sensor Flow Direction Arrow
Configure Discrete Output Source

8.3.4 Configure Frequency Output Mode (dual-pulse mode)

Display	**Menu → Configuration → Inputs/Outputs → Channel x → I/O Settings → Dual-Pulse Mode**
ProLink III	**Device Tools → Configuration → I/O → Outputs → Frequency Output Mode**
Field communicator	**Configure → Manual Setup → Inputs/Outputs → Channel *x* → Frequency Output *x* → Mode**

If you have two frequency outputs, **Frequency Output Mode** defines the relationship between their signals. **Frequency Output Mode** is used to implement dual-pulse mode or quadrature mode.

Restriction

If you do not have two frequency outputs on your transmitter, **Frequency Output Mode** is set to Independent and cannot be changed.

Important

If **Frequency Output Mode** is set to anything other than Independent, the configuration of Frequency Output 1 is applied to Frequency Output 2. Any configuration parameters set for Frequency Output 2 are ignored. Also, status information for Frequency Output 2 is ignored.

Prerequisites

If you want to use dual-pulse mode:

- Channel C must be configured as Frequency Output 1.
- Channel D is the only channel that can be configured as Frequency Output 2.

Procedure

Set **Frequency Output Mode** as desired.

Options for Frequency Output Mode

Option	Process condition and effect	Channel behavior	
Independent	No relationship between the two outputs	Frequency Output 1	
		Frequency Output 2	
In-Phase 50% duty cycle	Signals are aligned	Frequency Output 1	
		Frequency Output 2	
90° Phase Shift 50% duty cycle	Frequency Output 1 leads Frequency Output 2 by 90°	Frequency Output 1	
		Frequency Output 2	
–90° Phase Shift 50% duty cycle	Frequency Output 1 lags Frequency Output 2 by 90°	Frequency Output 1	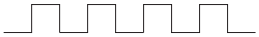
		Frequency Output 2	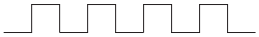
180° Phase Shift 50% duty cycle	Frequency Output 1 leads Frequency Output 2 by 180°	Frequency Output 1	
		Frequency Output 2	

8.3.5 Configure Frequency Output Fault Action

Display	**Menu → Configuration → Inputs/Outputs → Channel x → Frequency Output x → Fault Action**
ProLink III	**Device Tools → Configuration → I/O → Outputs → Frequency Output x → Fault Action**
Field communicator	**Configure → Manual Setup → Inputs/Outputs → Channel *x* → Frequency Output *x* → FO*x*Fault Settings → FO*x* Fault Action**

Frequency Output Fault Action controls the behavior of the Frequency Output if the transmitter detects a fault condition.

Important

- The fault action is implemented only if **Alert Severity** is set to Failure. If **Alert Severity** is set to any other option, the fault action is not implemented.
- For some faults only: If **Fault Timeout** is set to a non-zero value, the transmitter will not implement the fault action until the timeout has elapsed.

Procedure

1. Set **Frequency Output Fault Action** as desired.

   Default: Downscale

   Important
   If you set **Frequency Output Fault Action** to None, the Frequency Output will be controlled by the setting of **Process Variable Fault Action**. In most cases, if you set **Frequency Output Fault Action** to None, you should also set **Process Variable Fault Action** to None.

2. If you set **Frequency Output Fault Action** to Upscale, set **Frequency Fault Level** to the desired value.
   - Default: 14500 Hz
   - Range: 10 Hz to 14500 Hz

Related information

Configure Process Variable Fault Action

Options for Frequency Output Fault Action

Label	Frequency Output behavior
Upscale	Goes to configured Upscale value: • Default: 14500 Hz • Range: 10 Hz to 14500 Hz
Downscale	0 Hz
Internal Zero	0 Hz
None (default)	Determined by the setting of **Process Variable Fault Action**

8.4 Configure a Discrete Output

Use a Discrete Output to report specific meter or process conditions.

Depending on your purchase order and channel configuration, you may have 0–2 Discrete Outputs on the transmitter. Channel C can be configured as Discrete Output 1, and Channel D can be configured as Discrete Output 2.

The Discrete Outputs are configured independently, and they operate independently.

8.4.1 Configure Discrete Output Source

Display	**Menu → Configuration → Inputs/Outputs → Channel x → I/O Settings → Source**
ProLink III	**Device Tools → Configuration → I/O → Outputs → Discrete Output → Source**
Field communicator	**Configure → Manual Setup → Inputs/Outputs → Channel x → Discrete Output x → DOx Source**

Discrete Output Source specifies the process condition or device condition that is reported by a Discrete Output.

Procedure

Set **Discrete Output Source** to the desired option.

Default: Forward/Reverse

Postrequisites

If you set **Discrete Output Source** to Flow Switch, additional configuration is required.

Related information

Configure Flow Rate Switch

Options for Discrete Output Source

Option	Label			State	DO voltage
	Display	PLIII	FC		
Enhanced Event 1–5 (1)	Basic Event x	Enhanced Event x	Discrete Event x	ON	Externally powered: Site-specific
				OFF	0 V
Event 1–2 (2)	Enhanced Event x	Event x	Event x	ON	Externally powered: Site-specific
				OFF	0 V
Flow Rate Switch	Flow Rate Switch	Flow Switch Indicator	Flow Switch	ON	Externally powered: Site-specific
				OFF	0 V
Forward/ Reverse Indicator	Flow Direction	Forward Reverse Indicator	Forward/ Reverse	Forward flow	0 V
				Reverse flow	Externally powered: Site-specific
Calibration in Progress	Zero in Progress	Calibration in Progress	Cal in Progress	ON	Externally powered: Site-specific
				OFF	0 V
Fault	Fault	Fault Indication	Fault Condition Present	ON	Externally powered: Site-specific
				OFF	0 V
Meter Verification Failure	Meter Verification Fail	Meter Verification Failure	SMV Fail	ON	Externally powered: Site-specific
				OFF	0 V
Batch Primary Valve	Batch Primary Valve	Batch Primary Valve	Primary Valve	ON	Externally powered: Site-specific
				OFF	0 V

Option	Label			State	DO voltage
	Display	PLIII	FC		
Batch Secondary Valve	Batch Secondary Valve	Batch Secondary Valve	Secondary Valve	ON	Externally powered: Site-specific
				OFF	0 V
Batch Pump	Batch Pump	Batch Pump	Batch Pump	ON	Externally powered: Site-specific
				OFF	0 V

(1) Events configured using the enhanced event model.
(2) Events configured using the basic event model.

Important
This table assumes that **Discrete Output Polarity** is set to Active High. If **Discrete Output Polarity** is set to Active Low, reverse the voltage values.

Important
Actual flow direction interacts with **Sensor Flow Direction Arrow** to determine the flow direction that the transmitter uses in processing. See the following table.

Table 8-3: Interaction between actual flow direction and Sensor Flow Direction Arrow

Actual flow direction	Setting of Sensor Flow Direction Arrow	Flow direction sent to outputs and totalizers
Forward (same direction as Flow arrow on sensor)	With Arrow	Forward
	Against Arrow	Reverse
Reverse (opposite from Flow arrow on sensor)	With Arrow	Reverse
	Against Arrow	Forward

8.4.2 Configure Discrete Output Polarity

Display	**Menu → Configuration → Inputs/Outputs → Channel x → I/O Settings → Polarity**
ProLink III	**Device Tools → Configuration → I/O → Outputs → Discrete Output → Polarity**
Field communicator	**Configure → Manual Setup → Inputs/Outputs → Channel x → Discrete Output x → DOx Polarity**

A Discrete Output has two states: ON (active, asserted) and OFF (inactive). Two different voltages are used to represent these states. Discrete Output Polarity controls which voltage represents which state.

Procedure

Set **Discrete Output Polarity** as desired.

Default: Active High

8.4.3 Configure Discrete Output Fault Action

Display	**Menu → Configuration → Inputs/Outputs → Channel *x* → I/O Settings → Fault Action**
ProLink III	**Device Tools → Configuration → I/O → Outputs → Discrete Output → Fault Action**
Field communicator	**Configure → Manual Setup → Inputs/Outputs → Channel *x* → Discrete Output *x* → DO *x* Fault Action**

Discrete Output Fault Action controls the behavior of a Discrete Output if the transmitter detects a fault condition.

Important

- The fault action is implemented only if **Alert Severity** is set to Failure. If **Alert Severity** is set to any other option, the fault action is not implemented.
- For some faults only: If **Fault Timeout** is set to a non-zero value, the transmitter will not implement the fault action until the timeout has elapsed.

NOTICE

Do not use **Discrete Output Source** as a fault indicator. If you do, you may not be able to distinguish a fault condition from a normal operating condition. If you want to use the Discrete Output as a fault indicator, see Fault indication with a Discrete Output.

Procedure

Set **Discrete Output Fault Action** as desired.

Default: None

Related information

Interaction between Process Variable Fault Action and other fault actions

Options for Discrete Output Fault Action

Label	Discrete Output behavior	
	Polarity=Active High	**Polarity=Active Low**
Upscale	• Fault: Discrete Output is ON (24 VDC or site-specific voltage) • No fault: Discrete Output is controlled by its assignment	• Fault: Discrete Output is OFF (0 V • No fault: Discrete Output is controlled by its assignment
Downscale	• Fault: Discrete Output is OFF (0 V • No fault: Discrete Output is controlled by its assignment	• Fault: Discrete Output is ON (24 VDC or site-specific voltage) • No fault: Discrete Output is controlled by its assignment
None (default)	Discrete Output is controlled by its assignment	

Fault indication with a Discrete Output

To indicate faults via a Discrete Output, set **Discrete Output Source** to Fault. Then, if a fault occurs, the Discrete Output is always ON and the setting of **Discrete Output Fault Action** is ignored.

9 Configure digital communications

9.1 Configure HART communications

HART communications parameters support HART communications with the transmitter on a Bell 202 physical layer (Channel A).

9.1.1 Configure basic HART parameters

Display	**Menu → Configuration → Time/Date/Tag**
ProLink III	**Device Tools → Configuration → Communications → Communications (HART)**
Field communicator	**Configure → Manual Setup → HART → Communications**

Basic HART parameters include the HART address, HART tags, and the operation of the primary mA output.

Procedure

1. Set **HART Address** to a value that is unique on your network.
   - Default: 0
   - Range: 0 to 63

   Tip
   - The default address is typically used unless you are a multidrop environment.
   - Devices using HART protocol to communicate with the transmitter may use either **HART Address**, **HART Tag**, or **HART Long Tag** to identify the transmitter. Configure any or all, as required by your other HART devices.

2. Set **HART Tag** to a value that is unique on your network.
3. Set **HART Long Tag** to a value that is unique on your network.

   HART Long Tag is supported only by HART 7. If you are using HART 5, you cannot use **HART Long Tag** to communicate with the transmitter.

4. Ensure that **mA Output Action** is configured appropriately.

Option	Description
Enabled (Live)	The primary mA output reports process data as configured. This is the appropriate setting for most applications.
Disabled (Fixed)	The primary mA output is fixed at 4 mA and does not report process data.

Important
If you use ProLink III to set **HART Address** to `0`, the program automatically enables **mA Output Action**. If you use ProLink III to set **HART Address** to any other value, the program automatically disables **mA**

Output Action. This is designed to make it easier to configure the transmitter for legacy behavior. Always verify **mA Output Action** after setting **HART Address**.

9.1.2 Configure HART variables (PV, SV, TV, QV)

Display	**Menu → Configuration → Inputs/Outputs → Channel A → HART Settings → HART Variables**
ProLink III	**Device Tools → Configuration → Communications → Communications (HART) → Variable Assignment**
Field communicator	**Configure → Manual Setup → Inputs/Outputs → Variable Mapping**

The HART variables are a set of four variables predefined for HART use. The HART variables include the Primary Variable (PV), Secondary Variable (SV), Tertiary Variable (TV), and Quaternary Variable (QV). You can assign specific process variables to the HART variables, and then use standard HART methods to read or broadcast the assigned process data.

The default HART variables are as follows:

PV Mass Flow

SV Density

TV Volume Flow

QV Temperature

Note
The Tertiary Variable and Quaternary Variable are also called the Third Variable (TV) and Fourth Variable (FV).

Restriction
The Primary Variable is always the process variable assigned to **mA Output 1**. If you change either of these assignments, the other is changed automatically.

The Secondary Variable and Tertiary Variable are not tied to any outputs. This is different from previous Micro Motion Coriolis transmitters.

Procedure

Assign variables to the PV, SV, TV, and QV as desired.

Options for HART variables

Process variable	PV	SV	TV	QV
Standard				
Mass flow rate	✓	✓	✓	✓
Volume flow rate	✓	✓	✓	✓
Gas standard volume flow rate	✓	✓	✓	✓
Temperature	✓	✓	✓	✓
Density	✓	✓	✓	✓
External pressure	✓	✓	✓	✓
External temperature	✓	✓	✓	✓

Process variable	PV	SV	TV	QV
Totalizers and inventories				
Current value of any totalizer		✓	✓	✓
Current value of any inventory		✓	✓	✓
Diagnostics				
Velocity	✓	✓	✓	✓
Drive gain	✓	✓	✓	✓
Tube frequency		✓	✓	✓
Meter temperature		✓	✓	✓
Board temperature		✓	✓	✓
Inlet (LPO) amplitude		✓	✓	✓
Outlet (RPO) amplitude		✓	✓	✓
Live zero		✓	✓	✓
PV loop current		✓	✓	✓
% of range		✓	✓	✓
Two-phase flow severity	✓	✓	✓	✓
ChA internal mA readback				✓
API Referral				
Temperature-corrected density	✓	✓	✓	✓
Temperature-corrected (standard) volume flow rate	✓	✓	✓	✓
Average temperature-corrected density	✓	✓	✓	✓
Average temperature	✓	✓	✓	✓
CTPL		✓	✓	✓
Concentration measurement				
Density at reference	✓	✓	✓	✓
Specific gravity	✓	✓	✓	✓
Standard volume flow rate	✓	✓	✓	✓
Net mass flow rate	✓	✓	✓	✓
Net volume flow rate	✓	✓	✓	✓
Concentration	✓	✓	✓	✓
Baume	✓	✓	✓	✓
Batching				
% of batch delivered	✓	✓	✓	✓

9.1.3 Configure burst communications

Burst mode is a mode of communication during which the transmitter regularly broadcasts HART digital information to the network via the primary mA output.

Configure HART burst messages

Display	**Menu → Configuration → Inputs/Outputs → Channel A → HART Settings → Burst Message x**
ProLink III	**Device Tools → Configuration → Communications → Communications (HART) → Burst Mode**
Field communicator	**Configure → Manual Setup → HART → Burst Mode**

Burst messages contain information on process variables or transmitter status. You can configure up to three burst messages. Each message can contain different information. Burst messages also provide the mechanism for trigger mode and event notification.

Procedure

1. Navigate to the burst message you want to configure.
2. Enable the burst message.
3. Set **Burst Option** to the desired content.

Table 9-1: Options for burst message contents

HART command	Label		Description
	PLII	FC	
1	Source (Primary Variable)	Primary Variable	The transmitter sends the primary variable (PV) in the configured measurement units in each burst message (e.g., 14.0 g/sec, 13.5 g/sec, 12.0 g/sec).
2	Primary Variable (Percent Range/Current)	Pct Range/Current	The transmitter sends the PV's actual mA level and the PV's percent of range in each burst message (e.g., 11.0 mA 25%).
3	Process Variables/ Current	Process Vars/Current	The transmitter sends the PV's actual milliamp reading and the PV, SV, TV, and QV values in measurement units in each burst message (e.g., 11.8 mA, 50 g/sec, 23 °C, 50 g/sec, 0.0023 g/cm^3).
9	Read Device Variables with Status	Device Variables with Status	The transmitter sends up to eight user-specified process variables in each burst message.
33	Transmitter Variables	Field Device Vars	The transmitter sends four user-specified process variables in each burst message.
48	Read Additional Transmitter Status	Read Additional Device Status	The transmitter sends expanded device status information in each burst message.

4. Depending on your choice, select the four or eight user-specified variables for the burst message, or set the HART variables as desired.

Important
If you change the HART Primary Variable (PV), the process variable assigned to mA Output 1 is automatically changed to match.

Configure HART trigger mode

Display	**Menu → Configuration → Inputs/Outputs → Channel A → HART Settings → Burst Message *x* → Trigger Mode**
ProLink III	**Device Tools → Configuration → Communications → Communications (HART) → Trigger Mode**
Field communicator	**Configure → Manual Setup → HART → Burst Mode → Burst Message *x* → Configure Update Rate**

Trigger mode uses the burst message mechanism to indicate that a process variable has changed. When trigger mode is implemented, the bursting interval (HART update rate) changes if Primary Variable or Burst Variable 0 moves above or below the user-specified trigger level. You can set up a different trigger on each burst message.

Prerequisites

Before you can configure trigger mode, the corresponding HART burst message must be enabled.

Procedure

1. Select the burst message for which you will set up trigger mode.
2. Set **Trigger Mode** to the type of trigger you want to use.

Option	Description
Continuous	The burst message is sent at **Default Update Rate**. The burst interval is not affected by changes in process variables.
Falling	• When the specified process variable is above **Trigger Level**, the burst message is sent at **Default Update Rate**. • When the specified process variable is below **Trigger Level**, the burst message is sent at **Update Rate**.
Rising	• When the specified process variable is below **Trigger Level**, the burst message is sent at **Default Update Rate**. • When the specified process variable is above **Trigger Level**, the burst message is sent at **Update Rate**.
Windowed	This option is used to communicate that the process variable is changing rapidly. **Trigger Level** defines a deadband around the most recently broadcast value. • If the process variable stays within this deadband, the burst message is sent at **Default Update Rate**. • If the process variable moves outside this deadband in either direction, the burst message is sent at **Update Rate**.
On Change	• If any value in the burst message changes, the burst message is sent at **Update Rate**. • If no values change, the burst message is sent at **Default Update Rate**.

3. Ensure that **Primary Variable** or **Burst Variable 1** is set to the variable that will activate the trigger. If it is not, reconfigure the burst message contents.
4. Set **Trigger Level** to the value of the process variable at which the trigger will be activated.

5. Set **Default Update Rate** (or **Base Burst Rate**) to the burst interval to be used when the trigger is not active.
6. Set **Update Rate** (or **Triggered Burst Rate**) to the burst interval to be used when the trigger is active.

Configure HART event notification

Display	Not available
ProLink III	**Device Tools → Configuration → Communications → Communications (HART) → Event Notification**
Field communicator	**Configure → Manual Setup → HART → Event Notification**

Event notification uses the burst message mechanism to indicate that an alert has occurred. When event notification is enabled and one or more of the selected alerts occurs, each active burst message will broadcast HART Command 119 until the condition is acknowledged by a HART master.

Prerequisites

If you are using a field communicator, you must enable a burst message before you can configure event notification.

Tip
Event notification affects only HART burst messages. Whether an alert is selected for event notification or not, alert severity, alert status (active or inactive), fault timeout, and alert acknowledgment operate as normal.

Procedure

1. Enable event notification.
2. Select all desired alerts.

   If one or more of the selected alerts occurs, each active burst message will broadcast HART Command 119 until the alert is acknowledged by a HART master.

3. Set **Trigger Interval** as desired.

   Trigger Interval controls the delay before HART Command 119 s broadcast.

   - Default: 0 seconds
   - Range: 0.5 to 3600 seconds

   Trigger Interval begins when the transmitter detects the alert condition. When **Trigger Interval** expires:

   - If the alert is still active, HART Command 119 is broadcast.
   - If the alert is not active, no message is broadcast.

   Tip
   If you set **Trigger Interval** to 0, HART Command 119 is broadcast as soon as the alert is detected.

4. Set **Retry Rate** as desired.

   Retry Rate controls the rate at which HART Command 119 is broadcast when event notification is active.

   Default: 0.5 seconds

5. Set **Maximum Update Time** as desired.

   Maximum Update Time controls the rate at which HART Command 119 is broadcast when event notification is not active.

   Default: 60 seconds

10 Complete the configuration

10.1 Test or tune the system using sensor simulation

Display	**Menu → Startup Tasks → Commissioning Tools → Sensor Simulation**
ProLink III	**Device Tools → Diagnostics → Sensor Simulation**
Field communicator	**Service Tools → Simulate → Simulate Sensor**

Use sensor simulation to test the system's response to a variety of process conditions, including boundary conditions, problem conditions, or alert conditions, or to tune the loop.

Restriction

Sensor simulation is available only on flow meters with the enhanced core processor.

Prerequisites

Before enabling sensor simulation, ensure that your process can tolerate the effects of the simulated process values.

Procedure

1. Enable sensor simulation.
2. For mass flow, set **Wave Form** as desired and enter the required values.

Option	Required values
Fixed	Fixed Value
Sawtooth	Period Minimum Maximum
Sine	Period Minimum Maximum

3. For density, set **Wave Form** as desired and enter the required values.

Option	Required values
Fixed	Fixed Value
Sawtooth	Period Minimum Maximum
Sine	Period Minimum Maximum

4. For temperature, set **Wave Form** as desired and enter the required values.

Option	Required values
Fixed	Fixed Value
Sawtooth	Period Minimum Maximum
Sine	Period Minimum Maximum

5. Observe the system response to the simulated values and make any appropriate changes to the transmitter configuration or to the system.
6. Modify the simulated values and repeat.
7. When you have finished testing or tuning, disable sensor simulation.

10.1.1 Sensor simulation

Sensor simulation allows you to test the system or tune the loop without having to create the test conditions in your process. When sensor simulation is enabled, the transmitter reports the simulated values for mass flow, density, and temperature, and takes all appropriate actions. For example, the transmitter might apply a cutoff, activate an event, or post an alert.

When sensor simulation is enabled, the simulated values are stored in the same memory locations used for process data from the sensor. The simulated values are then used throughout transmitter functioning. For example, sensor simulation will affect:

- All mass flow rate, temperature, and density values displayed or reported via outputs or digital communications
- The mass total and mass inventory values
- All volume calculations and data, including reported values, volume totals, and volume inventories
- All mass, temperature, density, or volume values logged to Data Logger

Sensor simulation does not affect any diagnostic values.

Unlike actual mass flow rate and density values, the simulated values are not temperature-compensated (adjusted for the effect of temperature on the sensor's flow tubes).

10.2 Enable or disable software write-protection

Display	Use the mechanical switch on the display.
ProLink III	**Device Tools** → **Configuration** → **Write-Protection**
Field communicator	**Configure** → **Manual Setup** → **Security** → **Lock/Unlock Device**

When enabled, **Write-Protection** prevents changes to the transmitter configuration. You can perform all other functions, and you can view the transmitter configuration parameters.

Note

The write protection setting via software methods (such as ProLink III) is available only on transmitters without a display.

For transmitters with a display, write protection is available only using the lock switch on the display. See Lock or unlock the transmitter.

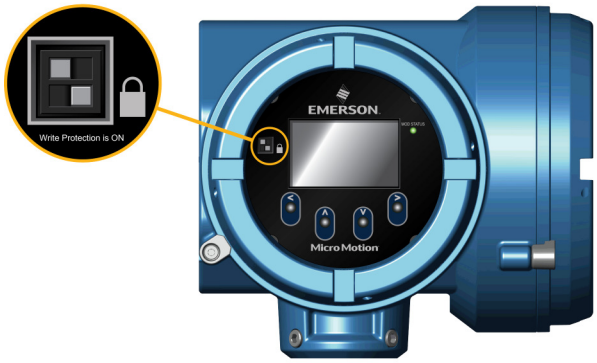

Write-protecting the transmitter primarily prevents accidental changes to configuration, not intentional changes. Any user who can make changes to the configuration can disable write protection.

11 Transmitter operation

11.1 View process and diagnostic variables

Process variables provide information about the state of the process fluid. Diagnostic variables provide data about device operation. You can use this data to monitor and troubleshoot your process.

11.1.1 View process and diagnostic variables using the display

The display reports the name of the variable (for example, *Density*), the current value of the variable, and the associated unit of measure (for example, kg/m^3).

Prerequisites

For a process or diagnostic variable to be viewed using the display, it must be configured as a display variable.

Procedure

- If **Auto Scroll** is not enabled, activate ⇩ or ⇧ to move through the list of display variables.
- If **Auto Scroll** is enabled, wait until the variable is displayed automatically. If you do not want to wait, you can activate ⇩ or ⇧ to force the display to scroll.

11.1.2 View process variables and other data using ProLink III

Monitor process variables, diagnostic variables, and other data to maintain process quality.

ProLink III automatically displays process variables, diagnostic variables, and other data on the main screen.

Tip
ProLink III allows you to choose the process variables that appear on the main screen. You can also choose whether to view data in Analog Gauge view or digital view, and you can customize the gauge settings. For more information, see the *Micro Motion ProLink III with ProcessViz Software User Manual*.

11.1.3 View process variables and other data using a field communicator

Monitor process variables, diagnostic variables, and other data to maintain process quality.

Procedure

- To view current values of basic process variables, choose **Overview**.
- To view a more complete set of process variables, plus the current state of the outputs, choose **Service Tools** → **Variables**.
- To view diagnostic variables, choose **Service Tools** → **Maintenance** → **Diagnostic Variables**.

11.1.4 Effect of Sensor Flow Direction Arrow on digital communications

Flow rates on the transmitter display or reported via digital communications are shown as positive or negative. The sign depends on the interaction between **Sensor Flow Direction Arrow** and the actual flow direction.

This interaction affects flow rates shown on the transmitter display, ProLink III, and all other user interfaces.

Actual flow direction	Setting of Sensor Flow Direction Arrow	Flow rate value	
		Transmitter display	Digital communications
Forward (same direction as Flow arrow on sensor)	With Arrow	Positive (no sign)	Positive
	Against Arrow	Negative	Negative
Reverse (opposite from Flow arrow on sensor)	With Arrow	Negative	Negative
	Against Arrow	Positive (no sign)	Positive

11.2 View and acknowledge status alerts

The transmitter posts a status alert whenever one of the specified conditions occurs. You can view active alerts and you can acknowledge alerts. You do not have to acknowledge alerts: The transmitter will perform normal measurement and reporting functions with unacknowledged alerts.

11.2.1 View and acknowledge alerts using the display

You can view information about all active or unacknowledged alerts, and you can acknowledge alerts.

The display uses the alert banner and the alert symbol ⓘ to provide information about alerts.

Table 11-1: Alert information on display

Display status	Cause	User action
Alert banner	One or more alerts are active.	Resolve the conditions to clear the alert. When the alert is cleared or acknowledged, the banner will be removed.
Alert symbol ⓘ	One or more alerts are unacknowledged.	Acknowledge the alert. When all alerts are acknowledged, the alert icon will be removed.

If alert security is enabled, the alert banner is never displayed. To view detailed information, you must use the alert menu: **Menu** → **(i) Alert List**.

Note
Certain alerts do not clear until the transmitter is rebooted.

Procedure

- If the alert banner appears:
  a) Activate **Info** to view information about the alert.
  b) Take appropriate steps to clear the alert.
  c) Activate **Ack** to acknowledge the alert.

- If ⓘ appears:
  a) Choose **Menu** → **(i) Alert List**.
  b) Select an alert to view more information about the specific alert or to acknowledge it individually.
  c) Choose **Acknowledge All Alerts** to acknowledge all alerts on the list.

11.2.2 View and acknowledge alerts using ProLink III

You can view a list containing all alerts that are active, or inactive but unacknowledged. From this list, you can acknowledge individual alerts or choose to acknowledge all alerts at once.

Note
Certain alerts do not clear until the transmitter is rebooted.

Procedure

1. View alerts on the ProLink III main screen under **Alerts**.

   All active or unacknowledged alerts are listed. Take appropriate steps to clear all active alerts.

2. To acknowledge a single alert, check the **Ack** check box for that alert. To acknowledge all alerts at once, select **Ack All**.

11.2.3 View alerts using a field communicator

You can view a list containing all alerts that are active, or inactive but unacknowledged.

Restriction
You cannot use a field communicator to acknowledge alerts. You can only view alerts. To acknowledge alerts, use the display or make a connection to the transmitter using a different tool.

Procedure

- To view active or unacknowledged alerts, choose **Service Tools** → **Alerts**.

  All active alerts and unacknowledged alerts are listed. Select an alert to view detailed information.

- To refresh the list, choose **Service Tools** → **Alerts** → **Refresh Alerts**.

11.3 Read totalizer and inventory values

Display	**Menu** → **Operations** → **Totalizers** → **See Totals**
ProLink III	**Device Tools** → **Totalizer Control** → **Totalizers** **Device Tools** → **Totalizer Control** → **Inventories**
Field communicator	**Overview** → **Totalizer Control**

Totalizers keep track of the total amount of mass or volume measured by the transmitter since the last totalizer reset. Inventories keep track of the total amount of mass or volume measured by the transmitter since the last inventory reset.

11.4 Start, stop, and reset totalizers and inventories

When a totalizer or inventory is started, its value increases or decreases depending on the interaction of the flow direction parameters. It continues tracking flow until it is stopped.

When a totalizer or inventory is reset, its value is set to 0. You can reset a totalizer or inventory while it is started or while it is stopped.

- You can start, stop, or reset each totalizer or inventory independently.
- You can start, stop, or reset all totalizers and inventories as a group.

11.4.1 Start, stop, and reset totalizers using the display

Prerequisites

To stop, start, or reset a single totalizer or inventory, the totalizer or inventory must be configured as a display variable.

To reset an inventory using the display, this function must be enabled. To enable inventory reset using the display, choose **Menu** → **Configuration** → **Security** and set **Totalizer Reset** to Allowed. Note that this affects only the display functions. Resetting inventories using other tools is not affected.

Procedure

- To start or stop a single totalizer or inventory:
  a) Wait or scroll until the totalizer or inventory appears on the display.
  b) Choose **Options**.
  c) Choose **Start** or **Stop**.
- To start or stop all totalizers and inventories as a group:
  a) Choose **Menu** → **Operations** → **Totalizers**.
  b) Choose **Start** or **Stop**.
- To reset a single totalizer or inventory:
  a) Wait or scroll until the totalizer or inventory appears on the display.
  b) Choose **Options**.
  c) Choose **Reset**.
- To reset all totalizers and inventories as a group:
  a) Choose **Menu** → **Operations** → **Totalizers**.
  b) Choose **Reset All**.

11.4.2 Start, stop, and reset totalizers using ProLink III

Prerequisites

To reset an inventory using ProLink III, this function must be enabled. To enable inventory reset using ProLink III, choose **Tools** → **Options** and enable **Reset Inventories from ProLink III**. Note that this affects only ProLink III. Resetting inventories using other tools is not affected.

Procedure

- To start or stop a single totalizer:
  a) Choose **Device Tools** → **Totalizer Control** → **Totalizers**.
  b) Scroll to the totalizer that you want to start or stop, and click **Start** or **Stop**.
- To start or stop a single inventory:
  a) Choose **Device Tools** → **Totalizer Control** → **Inventories**.
  b) Scroll to the inventory that you want to start or stop, and click **Start** or **Stop**.
- To start or stop all totalizers as a group:
  a) Choose **Device Tools** → **Totalizer Control** → **Totalizers** or **Device Tools** → **Totalizer Control** → **Inventories**.
  b) Select **Start All Totals** or **Stop All Totals**.
- To reset a single totalizer:
  a) Choose **Device Tools** → **Totalizer Control** → **Totalizers**.
  b) Scroll to the totalizer that you want to reset, and click **Reset**.
- To reset a single inventory:
  a) Choose **Device Tools** → **Totalizer Control** → **Inventories**.
  b) Scroll to the inventory that you want to reset, and click **Reset**.
- To reset all totalizers as a group:
  a) Choose **Device Tools** → **Totalizer Control** → **Totalizers**.
  b) Select **Reset All Totals**.
- To reset all inventories as a group:
  a) Choose **Device Tools** → **Totalizer Control** → **Inventories**.
  b) Select **Reset All Inventories**.

11.4.3 Start, stop, and reset totalizers using a field communicator

Procedure

- To start or stop a single totalizer:
  a) Choose **Overview** → **Totalizer Control** → **Totalizers 1-7**.
  b) Select the totalizer that you want to start or stop.
  c) Choose **Start** or **Stop**.
- To start or stop a single inventory:
  a) Choose **Overview** → **Totalizer Control** → **Inventories 1-7**.
  b) Select the inventory that you want to start or stop.
  c) Choose **Start** or **Stop**.

- To start or stop all totalizers and inventories as a group:
  a) Choose **Overview** → **Totalizer Control**.
  b) Click **Start Totalizers** or **Stop Totalizers**.
- To reset a single totalizer:
  a) Choose **Overview** → **Totalizer Control** → **Totalizers 1-7**.
  b) Select the totalizer that you want to reset.
  c) Choose **Reset**.
- To reset a single inventory:
  a) Choose **Overview** → **Totalizer Control** → **Inventories 1-7**.
  b) Select the inventory that you want to reset.
  c) Choose **Reset**.
- To reset all totalizers as a group, choose **Overview** → **Totalizer Control** → **Reset All Totals**.
- To reset all inventories as a group, choose **Overview** → **Totalizer Control** → **Reset All Inventories**.

12 Operation using the batcher

12.1 Run a batch

You can run a batch using any of the presets that are enabled. You can change the target for the current batch. You can pause and resume a batch in process. You can allow the batch to complete normally or you can end it manually.

Restriction
You cannot use a field communicator to run a batch.

Prerequisites

The preset that you want to use must be enabled.

Procedure

1. Select the preset you want to use.

Option	Description
Display	Choose **Menu** → **Batcher** → **Run Batch** and set **Active Preset** to the preset you want to use.
ProLink III	Choose **Device Tools** → **Configuration** → **Batcher** and set **Current Preset Number** to the preset you want to use.
Field communicator	Not available

The preset contains parameters that control batch processing.

2. If desired, change the configured target to the target to be used for this batch only.

Option	Description
Display	Choose **Current Preset Number** to the preset you want to use, and set **Batch Target** to the desired value.
ProLink III	Choose **Device Tools** → **Application Control** → **Run Batcher** and set **Current Target** to the desired value.
Field communicator	Not available

You cannot set the target to a value that is greater than the **Maximum Target** value configured for the batching application.

Changing the target here does not change the target configured in the preset.

3. Begin the batch.

Option	Description
Display	Choose **Menu** → **Batcher** → **Run Batch** → **Batch Control** and select **Begin**.
ProLink III	Choose **Device Tools** → **Application Control** → **Run Batch** and select **Begin Batch**.
Field communicator	Not available

The transmitter automatically resets the batch total to 0 if you have selected **Reset on Start**. Otherwise, you must manually reset the batch total before the batch will start.

Reset on Start is not applicable for custody transfer batcher applications.

4. Monitor the batch during processing.

Option	Description
Display	Choose **Menu** → **Batcher** → **Run Batch** → **Batch Control** and observe the value displayed in **Actual Total**.
ProLink III	Choose **Device Tools** → **Application Control** → **Run Batcher** and observe the values displayed in **Current Total** and **Batch Time**.
Field communicator	Not available

5. Optional: Pause the batch at any time.

Option	Description
Display	Choose **Menu** → **Batcher** → **Run Batch** → **Batch Control** and select **Pause**.
ProLink III	Choose **Device Tools** → **Application Control** → **Run Batcher** and select **Pause Batcher**.
Field communicator	Not available

Pausing a batch allows you to resume it later.

6. Optional: Resume the batch after it has been paused.

Option	Description
Display	Choose **Menu** → **Batcher** → **Run Batch** → **Batch Control** and select **Resume**.
ProLink III	Choose **Menu** → **Batcher** → **Run Batch** → **Batch Control** and select **Resume**.
Field communicator	Not available

7. Optional: End the batch manually at any time before it reaches the target.

Option	Description
Display	Choose **Menu** → **Batcher** → **Run Batch** → **Batch Control** and select **End**.
ProLink III	Choose **Device Tools** → **Application Control** → **Run Batcher** and select **End Batch**.
Field communicator	Not available

If you end a batch manually, you will not be able to resume it. You can end the batch while it is running and while it is paused.

8. If you did not end the batch manually, wait until the batch ends automatically.

Option	Description
Display	Choose **Menu** → **Batcher** → **Run Batch** → **Batch Control**.
ProLink III	Choose **Device Tools** → **Application Control** → **Run Batcher**.
Field communicator	Not available

The batch ends automatically when it reaches the target or when it reaches the configured maximum fill time.

9. Optional: Inhibit batch.

Option	Description
Display	Not available.
ProLink III	Choose **Device Tools** → **Application Control** → **Run Batcher**.
Field communicator	Not available

While the **Inhibit Batch** input is active, a batch will not be allowed to start. Attempting to start a batch while the batch is inhibited will cause the Start Not Okay alarm to be posted.

10. Optional: Inhibit totalizer.

Option	Description
Display	Not available.
ProLink III	Choose **Device Tools** → **Application Control** → **Run Batcher**.
Field communicator	Not available

When the **Inhibit Totalizer** input is active, the **Batch Total** will not increment. A timeout alarm will occur if the **Batch Total** is inhibited beyond the max batch time. The batch inventory for the current preset will not increment while **Inhibit Totalizer** is active.

11. Optional: Inhibit flow.

Option	Description
Display	Not available.
ProLink III	Choose **Device Tools** → **Application Control** → **Run Batcher**.
Field communicator	Not available

When the **Inhibit Flow** input is active, the batch will ignore the flow rate of the assigned flow source, allowing a batch to end. The batch total will not increment when flow is inhibited.

12.2 Perform AOC calibration

AOC calibration "trains" the AOC algorithm to adjust for your network speed and valve closure speed. AOC calibration is required only if **AOC Compensation Mode** is set to AOC Algorithm.

There are two options for AOC calibration:

- Calculate and save: When you are satisfied with the results of AOC calibration, you can save the current AOC coefficient. It will be used for all batches.
- Rolling calibration: The AOC coefficient is recalculated for each batch, based on the results of the most recent batches.

Prerequisites

Compensation Mode must be set to AOC.

12.2.1 Perform AOC calibration using the display

Procedure

- To calculate and save an AOC coefficient:
  a) Choose **Menu** → **Operations** → **Batcher** → **AOC Calibration**.
  b) Set **AOC Cal Status** to On.
  c) Run several batches, allowing each batch to run to completion, and observe the totals.
  d) When batch repeatability meets requirements, set **AOC Cal Status** to Off.

     AOC calibration is stopped, and the current coefficient is saved.

Important
If you are using a saved value, repeat AOC calibration:

— Whenever the fluid characteristics change, especially viscosity

— Whenever you change any configuration parameter that can affect flow measurement (e.g., damping)

- To set up rolling calibration:
  a) Choose **Menu** → **Operations** → **Batcher** → **AOC Calibration**.
  b) Set **AOC Window** to the number of batches that the rolling AOC coefficient will be based on.
  c) Set **AOC Cal Status** to On.

Important
If you are using rolling calibration, and fluid characteristics change or the transmitter configuration changes, the transmitter will automatically adjust to the new conditions after a few batches.

12.2.2 Perform AOC calibration using ProLink III

Procedure

- To calculate and save an AOC coefficient:
  a) Choose **Device Tools** → **Application Control** → **Run Batcher**.
  b) Click **Start AOC Calibration**.
  c) Run several batches, allowing each batch to run to completion, and observe the totals.
  d) When batch repeatability meets requirements, click **Save AOC Calibration**.

     AOC calibration is stopped, and the current coefficient is saved.

Important
If you are using a saved value, repeat AOC calibration:

— Whenever the fluid characteristics change, especially viscosity

— Whenever you change any configuration parameter that can affect flow measurement (e.g., damping)

- To set up rolling calibration:
  a) Choose **Device Tools** → **Configuration** → **Batcher**.
  b) Set **AOC Window Length** to the number of batches that the rolling AOC coefficient will be based on.
  c) Choose **Device Tools** → **Application Control** → **Run Batcher**.
  d) Click **Start AOC Calibration**.

Important
If you are using rolling calibration, and fluid characteristics change or the transmitter configuration changes, the transmitter will automatically adjust to the new conditions after a few batches.

13 Measurement support

13.1 Use Smart Meter Verification

Smart Meter Verification™ provides in-process flow meter health verification by analyzing the meter components related to measurement performance. You can run Smart Meter Verification without stopping the process. Use this section to run a Smart Meter Verification test, view and interpret the results, set up automatic execution, and check if a field reference point has been established.

Important
Run the first Smart Meter Verification Basic or Professional test when the flow meter is installed in the pipeline and the flow meter is at its normal operating conditions.

Prerequisites

The following information pertains to 5700 intrinsically safe outputs firmware ≥ v1.10.

- To avoid or reduce corrosion, erosion, and other process effects, make sure the sensor tube material is compatible with the process fluid in use. For more information, see the *Micro Motion Corrosion Guide*.
- **Important**
  Micro Motion highly recommends:
  — Running the first Smart Meter Verification test when the flow meter is installed in the pipeline according to the installation instructions, and the process is running at its normal operating conditions
  — Running all tests thereafter at similar operating conditions
- The Smart Meter Verification test runs best when process conditions are stable. If process conditions are too unstable, the test will abort. To maximize process stability:
  — Maintain a constant fluid temperature and pressure.
  — Maintain a constant flow rate. If possible, stop flow through the sensor. The sensor should be full of process fluid.
  — Avoid changes to fluid composition; for example, two-phase flow or settling.
- For all applications, run Smart Meter Verification while commissioning the meter at normal operating conditions and then run it regularly. Micro Motion also recommends using Smart Meter Verification results along with other diagnostics like drive gain and density to help determine the health of a sensor.
- In certain scenarios, Smart Meter Verification field upgrades for pre-installed meters are possible. Contact factory support to discuss pre-installed meter upgrades.

13.1.1 Run a Smart Meter Verification test

Run a Smart Meter Verification Basic or Professional test to diagnose the flow meter (and flow meter system) and verify if the flow meter is functioning properly and performing within factory specifications.

Important
Run the first Smart Meter Verification Basic or Professional test when the flow meter is installed in the pipeline and the flow meter is at its normal operating conditions.

Run a Smart Meter Verification test using the display

Procedure

1. Read the Smart Meter Verification prerequisites in Use Smart Meter Verification if you have not done so already.
2. Choose **Menu** → **Operations** → **Smart Meter Verification** → **Run Verification**.
3. Select the desired output behavior.

Option	Description
Continue Measuring	During the test, all outputs will continue to report their assigned process variables. The test will run for approximately 90 seconds.
Fix at Last Measured Value	During the test, all outputs will report the last measured value of their assigned process variable. The test will run for approximately 140 seconds.
Fix at Fault	During the test, all outputs will go to their configured fault action. The test will run for approximately 140 seconds.

   The test starts immediately.
4. Wait for the test to complete.

   Note
   At any time during the process, you can abort the test. If the outputs were fixed, they will return to normal behavior.

Run a Smart Meter Verification test using ProLink III Basic or Professional

Procedure

1. Read the Smart Meter Verification prerequisites in Use Smart Meter Verification if you have not done so already.
2. Run Smart Meter Verification Basic or Professional using ProLink III Basic or Professional:
   - Smart Meter Verification Basic: **Device Tools** → **Diagnostics** → **Meter Verification** → **Basic Meter Verification**
   - Smart Meter Verification Professional: **Smart Meter Verification Overview** → **Meter Verification** → **Run Verification**
   - Smart Meter Verification Professional: **Device Tools** → **Diagnostics** → **Meter Verification** → **Run Test**
3. In the ***SMV Test Definition*** window, enter any desired information and click **Next**.

   None of this information is required. It does not affect Smart Meter Verification processing.

   ProLink III stores this information in the Smart Meter Verification database on the PC. It is not saved to the transmitter.

4. Select the desired output behavior.

Option	Description
Continue Measuring	During the test, all outputs will continue to report their assigned process variables. The test will run for approximately 90 seconds.
Fix at Last Measured Value	During the test, all outputs will report the last measured value of their assigned process variable. The test will run for approximately 140 seconds.
Fix at Fault	During the test, all outputs will go to their configured fault action. The test will run for approximately 140 seconds.

5. Select **Start** and wait for the test to complete.

Note
At any time during the process, you can abort the test. If the outputs were fixed, they will return to normal behavior.

Run a Smart Meter Verification test using a field communicator

Field communicator	**Service Tools → Maintenance → Routine Maintenance → SMV → Manual Verification → Start**

Procedure

1. Read the Smart Meter Verification prerequisites in Use Smart Meter Verification if you have not done so already.
2. Select the desired output behavior.

Option	Description
Continue Measuring	During the test, all outputs will continue to report their assigned process variables. The test will run for approximately 90 seconds.
Fix at Last Measured Value	During the test, all outputs will report the last measured value of their assigned process variable. The test will run for approximately 140 seconds.
Fix at Fault	During the test, all outputs will go to their configured fault action. The test will run for approximately 140 seconds.

The test starts immediately.

3. Wait for the test to complete.

Note
At any time during the process, you can abort the test. If the outputs were fixed, they will return to normal behavior.

13.1.2 View Smart Meter Verification test results

When the Smart Meter Verification Basic test is complete, a pass/fail result is displayed. With Smart Meter Verification Professional, detailed results and reports are available.

Note
With Smart Meter Verification Professional, the twenty most recent results are available. If viewed using ProLink III Basic or Professional, results for all tests that are in the PC database are available.

View Smart Meter Verification test results using the display

Results of the current Smart Meter Verification Basic or Professional test display automatically after the test is complete.

With Smart Meter Verification Professional, use the following procedure to view previous test results.

Procedure

1. Choose **Menu** → **Operations** → **Smart Meter Verification** → **Read Verification History**.
2. To view detailed data for an individual test, select it from the list.

View Smart Meter Verification test results using ProLink III Basic or Professional

Results of the current Smart Meter Verification Basic or Professional test display automatically after the test is complete.

With Smart Meter Verification Professional, use the following procedure to view previous test results.

To generate a previous test report, the Smart Meter Verification Professional test must have been run on the current PC in use.

Procedure

1. Choose one of the following options:
   - **Device Tools** → **Diagnostics** → **Meter Verification** → **View Previous Test Results**
   - **Smart Meter Verification Overview** → **Meter Verification** → **History**
2. To view details, choose the results of interest: **Show Report** (or **Next** to show the report).
   ProLink III displays a report containing details of the most recent tests. The report is automatically saved to the Smart Meter Verification database. You can print or export the report.

View Smart Meter Verification test results using a field communicator

In addition to test results, some field communicator brands provide a trend chart.

Results of the current Smart Meter Verification Basic or Professional test display automatically after the test is complete.

With Smart Meter Verification Professional, use the following procedure to view previous test results.

Procedure

1. Choose **Service Tools** → **Maintenance** → **Routine Maintenance** → **SMV** → **Manual Verification**.
2. Choose **Upload Results Data from Device**.

The field communicator stores only the most recent test result. To view earlier results, you must upload them from the device. They will be available only for the current session.

3. Choose **Show Results Table**.
   The field communicator displays detailed results for the first test.
4. Press **OK** to move through all test records in the local database.

Interpreting Smart Meter Verification results

When the Smart Meter Verification Basic or Professional test is completed, the result is reported as Pass, Fail, or Abort. (Some tools report the Fail result as `Advisory` instead.)

Pass The meter is performing within factory specifications.

Abort When you execute a Smart Meter Verification Basic or Professional test, the test performs a self-diagnostic check to ensure that the flow meter is stable prior to running the test. In the rare case that this check reveals an issue, Smart Meter Verification will report an abort code.

If you manually cancel an in-process Smart Meter Verification Basic or Professional test, the test result displays `Abort Code 1: User-Initiated Abort`. In this case, you can restart Smart Meter Verification without any further action. In the rare case any other abort occurs, contact factory support.

In all cases where a Smart Meter Verification Professional test aborts, no report will be generated.

Fail If a Smart Meter Verification Basic or Professional test ran at normal operating conditions while conditions were stable and failed, see Resolve a failed Smart Meter Verification test to determine the appropriate actions.

13.1.3 Set up Smart Meter Verification automatic execution

You can execute a Smart Meter Verification Basic or Professional test on demand or automatically schedule future runs. You can schedule future runs via two different options: as a single test at a user-defined future time, or automatically on a regular schedule.

Tip
The time between test runs must be between 1 and 1000 hours. The time for the first test run can be any positive floating number.

Set up Smart Meter Verification automatic execution using the display

Procedure

1. Choose **Menu** → **Operations** → **Smart Meter Verification** → **Schedule Verification**.
2. To schedule a single test:
   a) Set **Hours to 1st Run** to the number of hours to elapse before the test is run.
   b) Set **Hours Between** to `0`.

3. To schedule a recurring execution:
   a) Set **Specify Time Until Next Run** to the number of days, hours, and minutes to elapse before the first test is run.
   b) Set **Specify Time Between Recurring Runs** to the number of days, hours, and minutes to elapse between runs.
4. To disable scheduled execution:
   a) Set **Specify Time Until Next Run** to 0 **days**, 0 **hours**, and 0 **minutes**.
   b) Set **Specify Time Between Recurring Runs** to 0 **days**, 0 **hours**, and 0 **minutes**.

Set up Smart Meter Verification automatic execution using ProLink III Basic or Professional

Procedure

1. Select one of the following paths to access the Smart Meter Verification scheduler .
   - ProLink III Basic or Professional: Choose **Device Tools** → **Diagnostics** → **Meter Verification** → **Schedule Meter Verification**.
   - ProLink III Professional: Choose **Smart Meter Verification Overview** → **Tools** → **Schedule Smart Meter Verification**.
2. To schedule a single test:
   a) Set **Specify Time Until Next Run** to the number of days, hours, and minutes to elapse before the test is run.
   b) Set **Specify Time Between Recurring Runs** to 0 **days**, 0 **hours**, and 0 **minutes**.
3. To schedule a recurring execution:
   a) Set **Specify Time Until Next Run** to the number of days, hours, and minutes to elapse before the first test is run.
   b) Set **Specify Time Between Recurring Runs** to the number of days, hours, and minutes to elapse between runs.
4. To disable scheduled execution, choose **Disable Scheduled Execution**.

Set up Smart Meter Verification automatic execution using a field communicator

Field communicator	**Service Tools** → **Maintenance** → **Routine Maintenance** → **SMV** → **Automatic Verification**

Procedure

1. To schedule a single test:
   a) Set **Hrs Until Next Run** to the number of hours to elapse before the test is run.
   b) Set **Recurring Hours** to 0.
2. To schedule a recurring execution:

a) Set **Hrs Until Next Run** to the number of hours to elapse before the first test is run.

b) Set **Recurring Hours** to the number of hours to elapse between runs.

3. To disable scheduled execution, select **Turn Off Schedule**.

13.2 Advanced Phase Measurement

Micro Motion Advanced Phase Measurement software improves long-term flow reporting and measurement performance in processes with intermittent periods of two-phase flow, including liquids with entrained gas or gas with entrained liquid. If Advanced Phase Measurement is combined with the Net Oil or concentration measurement software options, the software can also report liquid concentration, Net Oil, and/or Gas Void Fraction (GVF) during the same two-phase conditions. For more information, see the *Micro Motion Advanced Phase Measurement Application Manual*.

The following measurement options are available with Advanced Phase Measurement software:

- Net Oil
- Liquid with Gas
- Gas with Liquid

Note
Each option is licensed separately in the transmitter. Field upgrades are permitted.

Table 13-1: Net oil

License option (ordering code)	Description	Availability
PO — Net Oil	Suitable for mixtures of oil and water. Add PL option to remediate for gas.	Can be combined with APM license code PL. PL is recommended since most net oil applications contain gas.

Table 13-2: Liquid with gas

License option (ordering code)	Description	Availability
PL — Advanced Phase Measurement Liquid with Gas	Suitable for any liquid with entrained gas.	Can be combined with APM license code PO. Can be combined with license code concentration measurement (CM).

Table 13-3: Gas with liquid

License option (ordering code)	Description	Availability
PG — Advanced Phase Measurement Gas with Liquid	Suitable for any gas that may contain entrained liquids (mist).	Cannot be activated with any other license code.

13.3 Piecewise linearization (PWL) for calibrating gas meters

Piecewise linearization (PWL) can linearize the measurements of flow meters for greater accuracy in order to measure gas over a wide range of flow rates. PWL does not apply when measuring liquid flow. When better

accuracy is required over the published gas measurement specifications, an Emerson-approved independent gas laboratory can calibrate gas up to 10 PWL adjustment points.

PWL configuration and calibration information is not available through HART®.

For more information, see the white paper, *The Practical Application of Multi-Point Piecewise Linear Interpolation (PWL) and Other Developing Trends with Coriolis Meters for Natural Gas Custody Transfer Applications*, available at www.emerson.com.

13.3.1 Configure PWL

Display	Not available
ProLink III	**Device Tools → Configuration → Process Measurement → Piecewise Linearization for Gas (PWL)**
Field communicator	Not available

13.4 Zero the meter

Display	**Menu → Service Tools → Verification & Calibration → Meter Zero → Zero Calibration**
ProLink III	**Device Tools → Calibration → Smart Zero Verification and Calibration → Calibrate Zero**
Field communicator	**Service Tools → Maintenance → Calibration → Zero Calibration → Perform Auto Zero**

Zeroing the meter establishes a baseline for process measurement by analyzing the sensor's output when there is no flow through the sensor tubes.

Important
In most cases, the factory zero is more accurate than the field zero. Do not zero the meter unless one of the following is true:

- The zero is required by site procedures.
- The stored zero value fails the zero verification procedure.

Do not verify the zero or zero the meter if a high-severity alert is active. Correct the problem, then verify the zero or zero the meter. You may verify the zero or zero the meter if a low-severity alert is active.

Prerequisites

Before performing a field zero, execute the zero verification procedure to see whether or not a field zero can improve measurement accuracy.

Important
Do not verify the zero or zero the meter if a high-severity alert is active. Correct the problem, then verify the zero or zero the meter. You may verify the zero or zero the meter if a low-severity alert is active.

Procedure

1. Prepare the meter:
   a) Allow the meter to warm up for at least 20 minutes after applying power.
   b) Run the process fluid through the sensor until the sensor temperature reaches the normal process operating temperature.

c) Stop flow through the sensor by shutting the downstream valve, and then the upstream valve if available.

d) Verify that the sensor is blocked in, that flow has stopped, and that the sensor is completely full of process fluid.

e) Observe the drive gain, temperature, and density readings. If they are stable, check the **Live Zero** or **Field Verification Zero** value. If the average value is close to 0, you should not need to zero the meter.

2. Modify **Zero Time**, if desired.

   Zero Time controls the amount of time the transmitter takes to determine its zero-flow reference point. The default **Zero Time** is 20 seconds. For most applications, the default **Zero Time** is appropriate.

3. Start the zero procedure and wait until it completes.
   When the calibration is complete:
   - If the zero procedure was successful, a `Calibration Success` message and a new zero value are displayed.
   - If the zero procedure failed, a `Calibration Failed` message is displayed.

Postrequisites

Restore normal flow through the sensor by opening the valves.

Need help?

If the zero fails:

- Ensure that there is no flow through the sensor, then retry.
- Remove or reduce sources of electromechanical noise, then retry.
- Set **Zero Time** to a lower value, then retry.
- If the zero continues to fail, contact customer service.
- If you want to restore the most recent valid value from transmitter memory:
  — Using the display: **Menu** → **Service Tools** → **Verification and Calibration** → **Meter Zero** → **Restore Zero** → **Restore Previous Zero**
  — Using ProLink III: **Device Tools** → **Calibration** → **Smart Zero Verification and Calibration** → **Calibrate Zero** → **Restore Prior Zero**
  — Using a field communicator: Not available
- If you want to restore the factory zero:
  — Using the display: **Menu** → **Service Tools** → **Verification and Calibration** → **Meter Zero** → **Restore Zero** → **Restore Factory Zero**
  — Using ProLink III: **Device Tools** → **Calibration** → **Smart Zero Verification and Calibration** → **Calibrate Zero** → **Restore Factory Zero**
  — Using a field communicator: **Service Tools** → **Maintenance** → **Calibration** → **Zero Calibration** → **Restore Factory Zero**

Restriction
Restore the factory zero only if your meter was purchased as a unit, it was zeroed at the factory, and you are using the original components.

Related information

Verify the zero

13.4.1 Terminology used with zero verification and zero calibration

Term	Definition
Zero	In general, the offset required to synchronize the left pickoff and the right pickoff under conditions of zero flow. Unit = microseconds.
Factory Zero	The zero value obtained at the factory, under laboratory conditions.
Field Zero	The zero value obtained by performing a zero calibration outside the factory.
Prior Zero	The zero value stored in the transmitter at the time a field zero calibration is begun. May be the factory zero or a previous field zero.
Manual Zero	The zero value stored in the transmitter, typically obtained from a zero calibration procedure. It may also be configured manually. Also called “mechanical zero” or “stored zero”.
Live Zero	The real-time bidirectional mass flow rate with no flow damping or mass flow cutoff applied. An adaptive damping value is applied only when the mass flow rate changes dramatically over a very short interval. Unit = configured mass flow measurement unit.
Zero Stability	A laboratory-derived value used to calculate the expected accuracy for a sensor. Under laboratory conditions at zero flow, the average flow rate is expected to fall within the range defined by the Zero Stability value (0 ± Zero Stability). Each sensor size and model has a unique Zero Stability value.
Zero Calibration	The procedure used to determine the zero value.
Zero Time	The time period over which the Zero Calibration procedure is performed. Unit = seconds.
Field Verification Zero	A 3-minute running average of the Live Zero value, calculated by the transmitter. Unit = configured mass flow measurement unit.
Zero Verification	A procedure used to evaluate the stored zero and determine whether or not a field zero can improve measurement accuracy.

13.5 Set up pressure compensation

Pressure compensation adjusts process measurement to compensate for the pressure effect on the sensor. The pressure effect is the change in the sensor’s sensitivity to flow and density caused by the difference between the calibration pressure and the process pressure.

Tip
Not all sensors or applications require pressure compensation. The pressure effect for a specific sensor model can be found in the product data sheet located at www.emerson.com. If you are uncertain about implementing pressure compensation, contact customer service.

Prerequisites

You will need the flow factor, density factor, and calibration pressure values for your sensor.

- For the flow factor and density factor, see the product data sheet for your sensor.
- For the calibration pressure, see the calibration sheet for your sensor. If the data is unavailable, use 20 psi (1.38 bar).

You must be able to supply pressure data to the transmitter.

If you plan to poll an external device, the primary mA Output (Channel A) must be wired to support HART communications.

13.5.1 Set up pressure compensation using the display

Procedure

1. Choose **Menu** → **Configuration** → **Process Measurement** → **Pressure**.
2. Set **Units** to the pressure unit used by the external pressure device.
3. Enter **Flow Factor** for your sensor.

   The flow factor is the percent change in the flow rate per PSI. When entering the value, reverse the sign.

   Example

   If the flow factor is −0.0002 % per PSI, enter `+0.0002` % per PSI.

4. Enter **Density Factor** for your sensor.

   The density factor is the change in fluid density, in g/cm^3/PSI. When entering the value, reverse the sign.

   Example

   If the density factor is −0.000006 g/cm^3/PSI, enter `+0.000006` g/cm3/PSI.

5. Set **Calibration Pressure** to the pressure at which your sensor was calibrated.

   The calibration pressure is the pressure at which your sensor was calibrated, and defines the pressure at which there is no pressure effect. If the data is unavailable, enter `20` PSI.

Postrequisites

Option	Description	Setup
Digital communications	A host writes pressure data to the meter at appropriate intervals.	1. Set **Pressure Source** to Fixed Value or Digital Communications. 2. Perform the necessary host programming and communications setup to write pressure data to the meter at appropriate intervals.

Choose **Menu** → **Service Tools** → **Service Data** → **View Process Variables** and verify the external pressure value.

Need help?

If the value is not correct:

- Ensure that the external device and the meter are using the same measurement unit.

- For digital communications:
  - Verify that the host has access to the required data.
  - Verify that the host is writing to the correct register in memory, using the correct data type.

13.5.2 Set up pressure compensation using ProLink III

Procedure

1. Choose **Device Tools** → **Configuration** → **Process Measurement** → **Pressure Compensation**.
2. Set **Pressure Compensation Status** to Enabled.
3. Set **Pressure Unit** to the unit used by the external pressure device.
4. Enter the **Density Factor** and **Flow Factor** for your sensor.
   a) Set **Process Fluid** to Liquid Volume or Gas Standard Volume, as appropriate.
   b) Compare the values shown in **Recommended Density Factor** and **Recommended Flow Factor** to the values from the product data sheet.
   c) To use the recommended values, click **Accept Recommended Values**.
   d) To use different factors, enter your values in the **Density Factor** and **Flow Factor** fields.

      The density factor is the change in fluid density, in g/cm^3/PSI. When entering the value, reverse the sign.

      Example

      If the density factor is −0.000006 g/cm^3/PSI, enter `+0.000006` g/cm3/PSI.

      The flow factor is the percent change in the flow rate per PSI. When entering the value, reverse the sign.

      Example

      If the flow factor is −0.0002 % per PSI, enter `+0.0002` % per PSI.

5. Set **Flow Calibration Pressure** to the pressure at which your sensor was calibrated.

   The calibration pressure is the pressure at which your sensor was calibrated, and defines the pressure at which there is no pressure effect. If the data is unavailable, enter `20` PSI.

6. Choose the method you will use to supply pressure data, and perform the required setup.

Option	Description	Setup
Digital communications	A host writes pressure data to the meter at appropriate intervals.	a. Set **Pressure Source** to Fixed Value or Digital Communications. b. Perform the necessary host programming and communications setup to write pressure data to the meter at appropriate intervals.

Postrequisites

The current pressure value is displayed in the **External Pressure** field. Verify that the value is correct.

Need help?

If the value is not correct:

- Ensure that the external device and the meter are using the same measurement unit.
- For digital communications:
  - Verify that the host has access to the required data.
  - Verify that the host is writing to the correct register in memory, using the correct data type.

13.5.3 Configure pressure compensation using a field communicator

Field communicator	**Configure → Manual Setup → Measurements → Optional Setup → External Pressure/Temperature → Pressure**

Procedure

1. Set **Pressure Unit** to the unit used by the external pressure device.
2. Enable **Pressure Compensation**.
3. Set **Flow Calibration Pressure** to the pressure at which your sensor was calibrated.

   The calibration pressure is the pressure at which your sensor was calibrated, and defines the pressure at which there is no pressure effect. If the data is unavailable, enter `20` PSI.

4. Enter **Flow Press Factor** for your sensor.

   The flow factor is the percent change in the flow rate per PSI. When entering the value, reverse the sign.

   Example

   If the flow factor is −0.0002 % per PSI, enter `+0.0002` % per PSI.

5. Enter **Density Pressure Factor** for your sensor.

   The density factor is the change in fluid density, in g/cm^3/PSI. When entering the value, reverse the sign.

   Example

   If the density factor is −0.000006 g/cm^3/PSI, enter `+0.000006` g/cm^3/PSI.

6. Choose the method to be used to supply pressure data, and perform the required setup.

Method	Description	Setup
Polling	The meter polls an external device for pressure data.	a. Choose **Configure** → **Manual Setup** → **Measurements** → **Optional Setup** → **External Pressure/Temperature** → **Pressure**. b. Set **Pressure Compensation** to Enable. c. Choose **Configure** → **Manual Setup** → **Measurements** → **Optional Setup** → **External Pressure/Temperature** → **External Polling**. d. Choose an unused polling slot. e. Set **Poll Control** to Poll as Primary or Poll as Secondary. **Option** / **Description**: Poll as Primary — No other HART masters will be on the network. A field communicator is not a HART master. Poll as Secondary — Other HART masters will be on the network. A field communicator is not a HART master. f. Set **External Device Tag** to the HART tag of the external pressure device. g. Set **Polled Variable** to Pressure.
Digital communications	A host writes pressure data to the meter at appropriate intervals.	a. Using a field communicator, choose **Configure** → **Manual Setup** → **Measurements** → **Optional Setup** → **External Pressure/Temperature** → **Pressure**. b. Set **Pressure Compensation** to Enable. c. Perform the necessary host programming and communications setup to write pressure data to the transmitter at appropriate intervals.

13.6 Validate the meter

Display	**Menu** → **Configuration** → **Process Measurement** → **Flow Variables** → **Mass Flow Settings** → **Meter Factor** **Menu** → **Configuration** → **Process Measurement** → **Flow Variables** → **Volume Flow Settings** → **Meter Factor** **Menu** → **Configuration** → **Process Measurement** → **Density** → **Meter Factor**
ProLink III	**Device Tools** → **Configuration** → **Process Measurement** → **Flow** → **Mass Flow Rate Meter Factor** **Device Tools** → **Configuration** → **Process Measurement** → **Flow** → **Volume Flow Rate Meter Factor** **Device Tools** → **Configuration** → **Process Measurement** → **Density** → **Density Meter Factor**
Field communicator	**Configure** → **Manual Setup** → **Measurements** → **Flow** → **Mass Factor** **Configure** → **Manual Setup** → **Measurements** → **Flow** → **Volume Factor** **Configure** → **Manual Setup** → **Measurements** → **Density** → **Density Factor**

Meter validation compares flow meter measurements reported by the transmitter to an external measurement standard. If the transmitter value for mass flow, volume flow, or density measurement is significantly different from the external measurement standard, you may want to adjust the corresponding meter factor. The flow meter's actual measurement is multiplied by the meter factor, and the resulting value is reported and used in further processing.

Prerequisites

Identify the meter factor(s) that you will calculate and set. You may set any combination of the three meter factors: mass flow, volume flow, and density. Note that all three meter factors are independent:

- The meter factor for mass flow affects only the value reported for mass flow.
- The meter factor for density affects only the value reported for density.
- The meter factor for volume flow affects only the value reported for volume flow or gas standard volume flow.

Important
To adjust volume flow, you must set the meter factor for volume flow. Setting a meter factor for mass flow and a meter factor for density will not produce the desired result. The volume flow calculations are based on original mass flow and density values, before the corresponding meter factors have been applied.

If you plan to calculate the meter factor for volume flow, be aware that validating volume in the field may be expensive, and the procedure may be hazardous for some process fluids. Therefore, because volume is inversely proportional to density, an alternative to direct measurement is to calculate the meter factor for volume flow from the meter factor for density. For instructions on this method, see Alternate method for calculating the meter factor for volume flow.

Obtain a reference device (external measurement device) for the appropriate process variable.

Important
For good results, the reference device must be highly accurate.

Procedure

1. Determine the meter factor as follows:
   a) Use the flow meter to take a sample measurement.
   b) Measure the same sample using the reference device.
   c) Calculate the meter factor using the following formula:

$$NewMeterFactor = ConfiguredMeterFactor \times \left(\frac{ReferenceMeasurement}{FlowmeterMeasurement}\right)$$

2. Ensure that the calculated meter factor does not fall outside 0.98 and 1.02. If the meter factor is outside these limits, contact customer service.
3. Configure the meter factor in the transmitter.

Calculating the meter factor for mass flow

The flow meter is installed and validated for the first time. The mass flow measurement from the transmitter is 250.27 lb. The mass flow measurement from the reference device is 250 lb. The mass flow meter factor is calculated as follows:

$$MeterFlow_{MassFlow} = 1 \text{ x} \left(\frac{250}{250.27}\right) = 0.9989$$

The first meter factor for mass flow is 0.9989.

One year later, the flow meter is validated again. The mass flow measurement from the transmitter is 250.07 lb. The mass flow measurement from the reference device is 250.25 lb. The new mass flow meter factor is calculated as follows:

$$MeterFlow_{MassFlow} = 0.9989 \text{ x} \left(\frac{250.25}{250.07}\right) = 0.9996$$

The new meter factor for mass flow is 0.9996.

13.6.1 Alternate method for calculating the meter factor for volume flow

The alternate method for calculating the meter factor for volume flow is used to avoid the difficulties that may be associated with the standard method.

This alternate method is based on the fact that volume is inversely proportional to density. It provides partial correction of the volume flow measurement by adjusting for the portion of the total offset that is caused by the density measurement offset. Use this method only when a volume flow reference is not available, but a density reference is available.

Procedure

1. Calculate the meter factor for density, using the standard method.
2. Calculate the meter factor for volume flow from the meter factor for density:

   $$MeterFactor_{Volume} = \left(\frac{1}{MeterFactor_{Density}}\right)$$

   The following equation is mathematically equivalent to the first equation. You may use whichever version you prefer.

   $$MeterFactor_{Volume} = ConfiguredMeterFactor_{Density} \times \left(\frac{Density_{Flowmeter}}{Density_{ReferenceDevice}}\right)$$

3. Ensure that the calculated meter factor does not fall outside 0.98 and 1.02. If the meter factor is outside these limits, contact customer service.
4. Configure the meter factor for volume flow in the transmitter.

13.7 Perform a (standard) D1 and D2 density calibration

Density calibration establishes the relationship between the density of the calibration fluids and the signal produced at the sensor. Density calibration includes the calibration of the D1 (low-density) and D2 (high-density) calibration points.

Important
Micro Motion flow meters are calibrated at the factory, and normally do not need to be calibrated in the field. Calibrate the flow meter only if you must do so to meet regulatory requirements. Contact customer support before calibrating the flow meter.

Tip
Use meter validation and meter factors, rather than calibration, to prove the meter against a regulatory standard or to correct measurement error.

Prerequisites

- During density calibration, the sensor must be completely filled with the calibration fluid, and flow through the sensor must be at the lowest rate allowed by your application. This is usually accomplished by closing the shutoff valve downstream from the sensor, then filling the sensor with the appropriate fluid.
- D1 and D2 density calibration require a D1 (low-density) fluid and a D2 (high-density) fluid. You may use air and water.
- If **LD Optimization** is enabled on your meter, disable it. To do this using a field communicator, choose **Configure** → **Manual Setup** → **Measurements** → **Optional Setup** → **LD Optimization**. **LD Optimization** is used only with large sensors in hydrocarbon applications. If you are not using a field communicator, contact Micro Motion before continuing.
- The calibrations must be performed without interruption, in the order shown. Make sure that you are prepared to complete the process without interruption.
- Before performing the calibration, record your current calibration parameters. You can do this by saving the current configuration to a file on the PC. If the calibration fails, restore the known values.

13.7.1 Perform a D1 and D2 density calibration using the display

Procedure

1. Read the Prerequisites in Perform a (standard) D1 and D2 density calibration if you have not already done so.
2. Close the shutoff valve downstream from the sensor.
3. Fill the sensor with the D1 fluid and allow the sensor to achieve thermal equilibrium.
4. Choose **Menu** → **Service Tools** → **Verification and Calibration** → **Density Calibration**.
5. Perform the D1 calibration.
   a) Choose **D1 (Air)**.
   b) Enter the density of your D1 fluid.
   c) Choose **Start Calibration**.
   d) Wait for the calibration to complete.
   e) Choose **Finished**.
6. Fill the sensor with the D2 fluid and allow the sensor to achieve thermal equilibrium.
7. Perform the D2 calibration.
   a) Choose **D2 (Water)**.
   b) Enter the density of your D2 fluid.
   c) Choose **Start Calibration**.
   d) Wait for the calibration to complete.
   e) Choose **Finished**.
8. Open the shutoff valve.

Postrequisites

If you disabled **LD Optimization** before the calibration procedure, re-enable it.

13.7.2 Perform a D1 and D2 density calibration using ProLink III

Procedure

1. Read the Prerequisites in Perform a (standard) D1 and D2 density calibration if you have not already done so.
2. See the following figure.

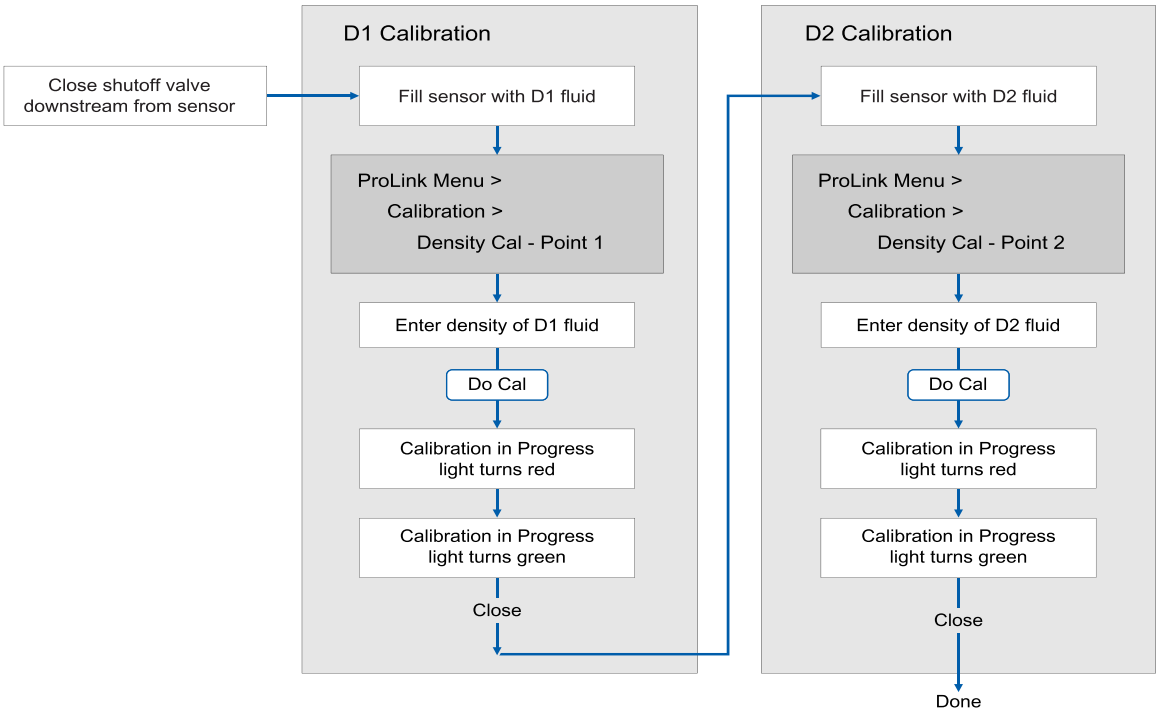

Postrequisites

If you disabled **LD Optimization** before the calibration procedure, re-enable it.

13.7.3 Perform a D1 and D2 density calibration using a field communicator

Procedure

1. Read the Prerequisites in Perform a (standard) D1 and D2 density calibration if you have not already done so.

2. See the following figure.

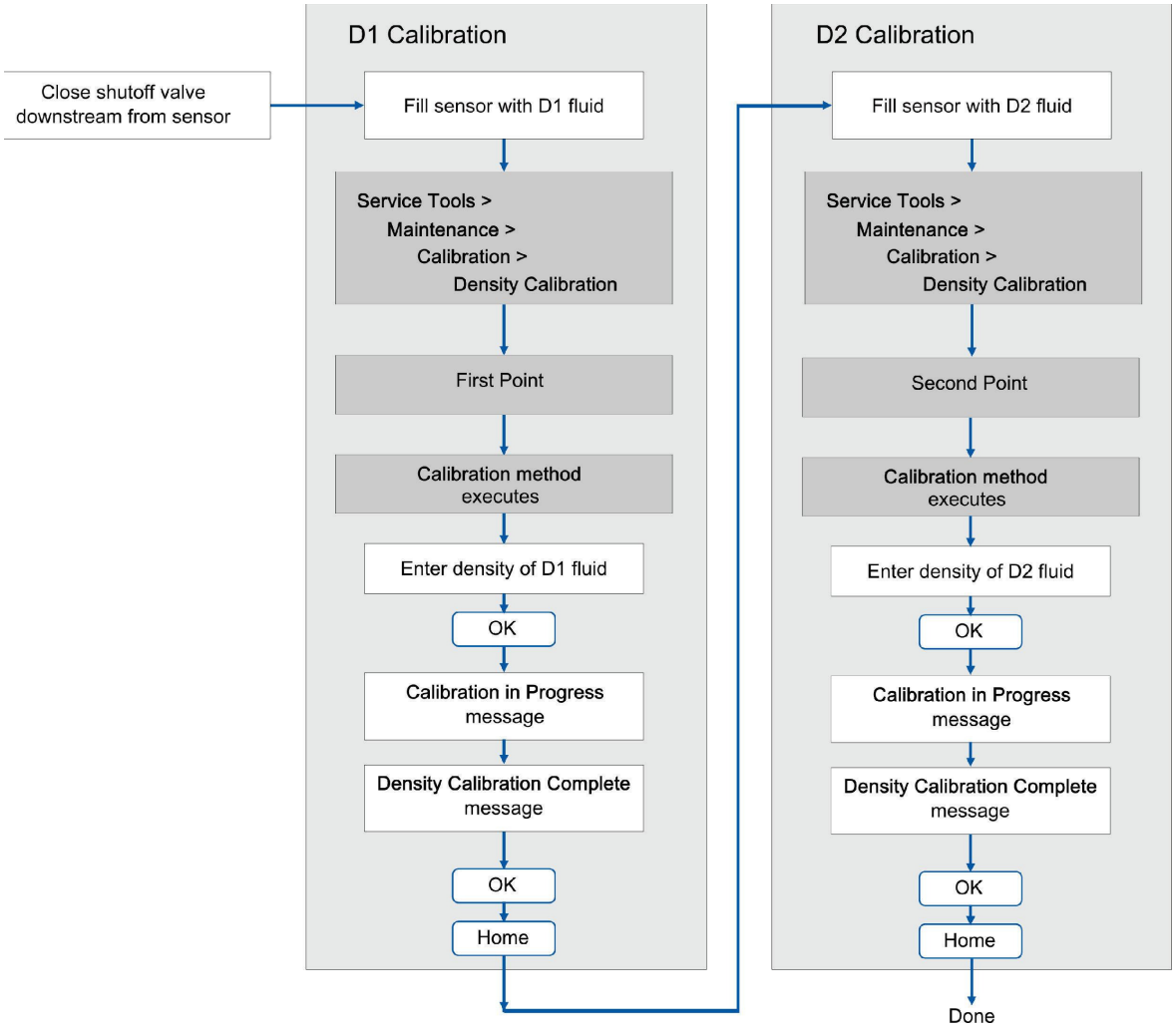

Postrequisites

If you disabled **LD Optimization** before the calibration procedure, re-enable it.

13.8 Adjust concentration measurement with Trim Offset

Trim Offset adjusts the meter's concentration measurement to match a reference value.

Tip
You can adjust concentration measurement by applying the trim offset only, or by applying both the trim offset and the trim slope. For most applications, the trim offset is sufficient.

Prerequisites

Ensure that the active matrix is the one that you want to trim. You can set the offset separately for each matrix on your transmitter.

You must be able to take a sample of your process fluid and obtain a laboratory concentration value at line density and line temperature.

Procedure

1. Take a concentration reading from the meter, and record line density and line temperature.
2. Take a sample of the process fluid and obtain a laboratory value for concentration at line density and line temperature, in the units used by the meter.
3. Subtract the meter value from the laboratory value.
4. Enter the result as the trim offset.
   - Using the display: Choose **Menu** → **Configuration** → **Process Measurement** → **Concentration Measurement** → **Configure Matrix**, select your matrix, and enter **Trim Offset**.
   - Using ProLink III: Choose **Device Tools** → **Configuration** → **Process Measurement** → **Concentration Measurement**, set **Matrix Being Configured** to your matrix, and enter **Trim Offset**.
   - Using a field communicator: Choose **Configure** → **Manual Setup** → **Measurements** → **Optional Setup** → **Conc Measurement** → **Configure Matrix** and set **Matrix Being Configured** to your matrix. Then choose **Service Tools** → **Maintenance** → **Calibration** → **Trim CM Process Variables** and enter **Concentration Offset**.
5. Take another concentration reading from the meter, and compare it to the laboratory value.
   - If the two values are acceptably close, the trim is complete.
   - If the two values are not acceptably close, repeat this procedure.

Calculating the trim offset

Laboratory value	64.21 °Brix
Meter value	64.93 °Brix

$$64.21 - 64.93 = -0.72$$

Concentration offset: −0.72

13.9 Adjust concentration measurement with Trim Slope and Trim Offset

Trim Slope and **Trim Offset** adjust the meter's concentration measurement to match a reference value.

Tip
You can adjust concentration measurement by applying the trim offset only, or by applying both the trim offset and the trim slope. For most applications, the trim offset is sufficient.

Prerequisites

Ensure that the active matrix is the one that you want to trim. You can set the offset and slope separately for each matrix on your transmitter.

You must be able to take measurements of your process fluid at two different concentrations.

You must be able to take a sample of your process fluid at each of these concentrations.

For each sample, you must be able to obtain a laboratory concentration value at line density and line temperature.

Procedure

1. Collect data for Comparison 1.
   a) Take a concentration reading from the meter and record line density and line temperature.
   b) Take a sample of the process fluid at the current concentration.
   c) Obtain a laboratory value for concentration at line density and line temperature, in the units used by the meter.
2. Collect data for Comparison 2.
   a) Change the concentration of your process fluid.
   b) Take a concentration reading from the meter and record line density and line temperature.
   c) Take a sample of the process fluid at the current concentration.
   d) Obtain a laboratory value for concentration at line density and line temperature, in the units used by the meter.
3. Populate the following equation with values from each comparison.

$$\text{Concentration}_{\text{Lab}} = (A \times \text{Concentration}_{\text{Meter}}) + B$$

4. Solve for A (slope).
5. Solve for B (offset), using the calculated slope and one set of values.
6. Enter the results as the trim slope and the trim offset.
   - Using the display: Choose **Menu** → **Configuration** → **Process Measurement** → **Concentration Measurement** → **Configure Matrix**, select your matrix, and enter **Trim Slope** and **Trim Offset**.
   - Using ProLink III: Choose **Device Tools** → **Configuration** → **Process Measurement** → **Concentration Measurement**, set **Matrix Being Configured** to your matrix, and enter **Trim Slope** and **Trim Offset**.
   - Using a field communicator: Choose **Configure** → **Manual Setup** → **Measurements** → **Optional Setup** → **Conc Measurement** → **Configure Matrix** and set **Matrix Being Configured** to your matrix. Then choose **Service Tools** → **Maintenance** → **Calibration** → **Trim CM Process Variables** and enter **Concentration Slope** and **Concentration Offset**.
7. Take another concentration reading from the meter, and compare it to the laboratory value.
   - If the two values are acceptably close, the trim is complete.
   - If the two values are not acceptably close, repeat this procedure.

Calculating the trim slope and the trim offset

Comparison 1	Laboratory value	50.00%
	Meter value	49.98%
Comparison 2	Laboratory value	16.00%
	Meter value	15.99%

Populate the equations:

$$50 = (A \times 49.98) + B$$

$$16 = (A \times 15.99) + B$$

Solve for A:

$$50.00 - 16.00 = 34.00$$

$$49.98 - 15.99 = 39.99$$

$$34 = A \times 33.99$$

$$A = 1.00029$$

Solve for B:

$$50.00 = (1.00029 \times 49.98) + B$$

$$50.00 = 49.99449 + B$$

$$B = 0.00551$$

Concentration slope (A): 1.00029

Concentration offset (B): 0.00551

14 Maintenance

14.1 Install a new transmitter license

Display	**Menu** → **Service Tools** → **License Manager**
ProLink III	**Device Tools** → **Configuration** → **Feature License**
Field communicator	**Overview** → **Device Information** → **Licenses**

Whenever you purchase additional features or request a trial license, you must install a new transmitter license. The new license makes the new features available on your transmitter. For concentration measurement and API Referral, you may still need to enable the application.

Prerequisites

- You must have a license file provided by Micro Motion:
  - `perm.lic`: Permanent license file
  - `temp.lic`: Temporary license file
- A USB drive

If you are planning to use the USB drive, the service port must be enabled. It is enabled by default. However, if you need to enable it, choose **Menu** → **Configuration** → **Security** and set **Service Port** to On.

Procedure

- To install a license using the display:
  a) Copy the license file to a folder on a USB drive.

     Important
     You must copy the license file to a folder. You cannot put it in the root.

  b) **WARNING**
     If the transmitter is in a hazardous area, do not remove the housing cover while the transmitter is powered up. Failure to follow these instructions can cause an explosion resulting in injury or death.

     Open the wiring compartment on the transmitter and insert the USB drive into the service port.

  c) Choose **Menu** → **USB Options** → **USB Drive** → **Transmitter** → **Load License File**.

  d) Select the folder containing the license file and follow the prompts.
- To install a license using ProLink III:
  a) Open the license file.

  b) Choose **Device Tools** → **Configuration** → **Feature License**.

  c) Copy the license from the file to the appropriate **License Key** field.

The features supported by the new license are displayed.

If you installed a temporary license, the transmitter will revert to its original feature set when the license period has expired. To purchase a feature for permanent use, contact customer support.

Postrequisites

If you installed a permanent license, update the options model code to match the new license. The options model code represents the installed features.

14.2 Upgrade the transmitter firmware

You can upgrade the transmitter firmware to stay current with development and to take advantage of any new features.

14.2.1 Using a USB drive with the display

You can upgrade the transmitter firmware to stay current with development and to take advantage of any new features.

Prerequisites

You must have the firmware upgrade files provided by Micro Motion.

The service port must be enabled. It is enabled by default. However, if you need to enable it, choose **Menu** → **Configuration** → **Security** and set **Service Port** to On.

Procedure

1. Copy the folder containing the firmware upgrade files to a USB drive.
2. **WARNING**
   If the transmitter is in a hazardous area, do not remove the housing cover while the transmitter is powered up. Failure to follow these instructions can cause an explosion resulting in injury or death.

   Open the wiring compartment and insert the USB drive into the service port.
3. Follow the prompts once the transmitter recognizes the USB drive.
4. Select **USB Drive –> Transmitter**.
5. Select **Update Device Software**.
6. Select the firmware upgrade folder and follow the prompts.

   Note
   If required, the transmitter upgrade procedure automatically includes an upgrade to the core processor software.

   If you chose to reboot the transmitter at a later date, you can reboot it from the menu, or you can power-cycle it.
7. Verify the transmitter configuration and all safety parameters.
8. Enable write-protection.

14.2.2 Using the USB service port and ProLink III

You can upgrade the transmitter firmware to stay current with development and to take advantage of any new features.

This procedure is not available over HART. You must use a service port.

WARNING
If the transmitter is in a hazardous area, do not remove the housing cover while the transmitter is powered up. Failure to follow these instructions can cause an explosion resulting in injury or death.

Prerequisites

You must have the firmware upgrade files provided by Emerson.

Procedure

1. Choose **Device Tools** → **Transmitter Software Update**.
2. Navigate to the folder containing the firmware upgrade files.
3. Select **Update**.

   Note
   If required, the transmitter upgrade procedure automatically includes an upgrade to the core processor software.

   If you chose to reboot the transmitter at a later date, you can reboot it from the display, or you can power-cycle it.
4. Verify the transmitter configuration and all safety parameters.
5. Enable write-protection.

14.3 Reboot the transmitter

Display	**Menu** → **Service Tools** → **Reboot Transmitter**
ProLink III	Not available
Field communicator	**Service Tools** → **Maintenance** → **Reset/Restore** → **Device Reset**

For certain configuration changes to take effect, the transmitter must be rebooted. You must also reboot the transmitter in order to clear certain status alerts.

Rebooting the transmitter has the same effect as power-cycling the transmitter.

Prerequisites

Follow appropriate procedures to select the appropriate time for rebooting the transmitter. The reboot typically takes about 10 seconds.

Postrequisites

Check the transmitter clock. During the reboot, the transmitter clock is powered by the battery, therefore the transmitter clock and all timestamps should be accurate. If the transmitter clock is not correct, the battery may need replacement.

14.4 Battery replacement

The transmitter contains a battery that is used to power the clock when the transmitter is not powered up. Users cannot service or replace the battery. If the battery requires replacement, contact customer support.

If the battery is non-functional and the transmitter is powered down, then powered up, the clock will restart from the time of the power-down. All timestamps will be affected. You can correct the issue by resetting the transmitter clock. For a permanent resolution, the battery must be replaced.

15 Log files, history files, and service files

15.1 Generate history files

Display	**Menu → USB Options → Transmitter –> USB Drive → Download Historical Files**
ProLink III	**Device Tools → Configuration Transfer → Download Historical Files**
Field communicator	Not available

The transmitter automatically saves historical data of several types, including process and diagnostic variables, Smart Meter Verification test results, and totalizer values. To access the historical data, you can generate a log file, then view it on your PC.

This procedure is not available over HART. You must use a service port.

WARNING
If the transmitter is in a hazardous area, do not remove the housing cover while the transmitter is powered up. Failure to follow these instructions can cause an explosion resulting in injury or death.

Prerequisites

If you want to generate a totalizer log, you must have previously configured the transmitter to record totalizer data. However, there is a totalizer history that is logged automatically.

If you plan to use the transmitter display:

- The service port must be enabled. It is enabled by default. However, if you need to enable it, choose **Menu → Configuration → Security** and set **Service Port** to On.
- You must have a USB drive.

Procedure

1. **WARNING**
   If the transmitter is in a hazardous area, do not remove the housing cover while the transmitter is powered up. Failure to follow these instructions can cause an explosion resulting in injury or death.

   If you are using the transmitter display, open the wiring compartment and insert the USB drive into the service port.
2. Select the type of log file that you want to generate.
3. If you selected historian data (process and diagnostic variables):
   a) Set the date and time for the first entry in the historian log file.
   b) Set the number of days that the log file will include.
   c) Select the record type.

Option	Description
1 Second Raw Data	The current values of process and diagnostic variables, recorded at 1-second intervals.
5 Min Average Data	The minimum and maximum values of the 1-second raw data over the last 5 minutes, plus the average and the standard deviation, recorded at 5-minute intervals.

The system provides an estimated file size or transfer time.

4. Specify the location where the log file will be saved.
   - If you are using the display, the log file is written to the USB drive.
   - If you are using ProLink III, the log file is written to a folder on your PC.

The log file is written to the specified location. File names are assigned as follows:

- Historian files: The file name is based on the transmitter tag, the starting date of the log contents, and the record type. The record type is shown as F or S:
  - F=Fast, for 1-second raw data
  - S=Slow, for 5-minute average data
- SMV files:
  - `SmvLast20Data.csv`
  - `SmvLongTermData.csv`
- Totalizer history files: `TotLog.txt`

15.1.1 Historian data and log

The transmitter automatically saves information about specific process and diagnostic variables to its working memory. You can generate a log from this data that tracks all 14 totalizers with 21 days worth of data. The historian log is an ASCII file in `.csv` format.

Contents of the historian log

There are two types of historian records:

1-second raw data	The current values of process and diagnostic variables, recorded at 1-second intervals.
5-minute average data	The minimum and maximum values of the 1-second raw data, plus the average and the standard deviation, calculated and recorded at 5-minute intervals.

When you generate the log, you can specify which type of record you want to see.

The historian in the transmitter's working memory contains a minimum of 4 weeks of 1-second raw data and 10 years of 5-minute average data.

Each record contains data for the following process and diagnostic variables:

- Timestamp
  - Format: Military time

  - Time and time zone: Transmitter clock
- Mass flow rate (kg/sec)
- Volume flow rate (l/sec) or GSV flow rate
- Density (g/cm³)
- Line temperature (°C)
- External temperature (if available)
- Pressure (if available)
- If concentration measurement is enabled:
  - Standard volume flow rate
  - Net mass flow rate
  - Net volume flow rate
  - Referred density
  - Concentration
- If API Referral is enabled:
  - CTPL or CTL
  - Corrected density
  - Corrected volume flow rate
- Alert status registers (hexadecimal format)
- Live zero (kg/sec)
- Tube frequency (Hz)
- Drive gain (%)
- Left pickoff (filtered) (V)
- Right pickoff (filtered (V)
- Left pickoff (raw) (V)
- Delta T
- Case temperature (°C)
- Voltage applied to the core processor (V)
- Temperature of the core processor board (°C)
- Temperature of the transmitter electronics (°C)

Historian data and power-cycles

Historian data is maintained across transmitter reboots and power-cycles.

Historian data and configuration files

If you restore the factory configuration or upload a configuration file, existing historian data is not affected.

Example: Historian log, 5-minute average data

S TAG:SUPPLY UID:22729F1F SW:000000045 800:000000402	MassFlow	MassFlow	MassFlow	MassFlow	...
DST ON:Mountain GMT-7.0 SM:T075 SN:000000000	kg/s Max	kg/s Min	kg/s Avg	kg/s Std	...
8/25/2020 9:58	0.0082359	0	0.00091223	9.76E-05	...
8/25/2020 10:03	0.001018	0.00084441	0.00091756	1.61E-05	...
8/25/2020 10:08	0.00099489	0.00086279	0.00092519	1.44E-05	...
8/25/2020 10:13	0.0010835	0.00080879	0.00093774	2.01E-05	...
8/25/2020 10:18	0.0011767	0.00084206	0.00094224	2.11E-05	...
8/25/2020 10:23	0.0010243	0.00086888	0.00094534	1.85E-05	...
8/25/2020 10:28	0.0010903	0.00084823	0.00094747	1.81E-05	...
8/25/2020 10:33	0.0010319	0.00085327	0.00095123	1.67E-05	...
8/25/2020 10:38	0.0011232	0.00088614	0.00095222	1.59E-05	...
8/25/2020 10:43	0.0010841	0.00081306	0.00095126	1.99E-05	...
8/25/2020 10:48	0.0010999	0.00086106	0.00095333	1.93E-05	...
8/25/2020 10:53	0.0011523	0.00085537	0.00095528	2.01E-05	...
...					

Note
The historian log displays only in English.

15.1.2 Smart Meter Verification history and log

The transmitter automatically saves test data for all Smart Meter Verification tests. You can generate a log containing data for the 20 most recent tests or for all Smart Meter Verification tests. The log is an ASCII file in `.csv` format.

Contents of Smart Meter Verification log

Each record in the Smart Meter Verification log represents a Smart Meter Verification test. Each record contains the following information:

- Date and time of test
- Data collected during the test
- The abort code (15=test completed normally)
- A pass/fail result for the left pickoff (0=Pass, 1=fail)
- A pass/fail result for the right pickoff (0=Pass, 1=fail)
- The sensor type code
- The sensor serial number

Smart Meter Verification history and power-cycles

If the transmitter is rebooted or power-cycled, Smart Meter Verification history is not affected.

Smart Meter Verification history and configuration files

If you restore the factory configuration or upload a configuration file, Smart Meter Verification history is not affected.

Example: Smart Meter Verification log

Device UID: 577937183

Device Tag: SUPPLY

Time Zone: GMT -7.00

Date Time	LPO Stiff	RPO Stiff	LPO Mass	RPO Mass	Damping	Drv mA	...
8/13/2020 19:27	0.285876	0.289738	0.155294	0.158114	4.41E-05	1.301	...
8/14/2020 7:27	-0.06137	-0.05808	0.154748	0.157556	4.02E-05	1.304	...
8/14/2020 19:27	0.204754	0.20932	0.155185	0.158004	4.35E-05	1.308	...
8/15/2020 7:27	-0.15382	-0.15216	0.154612	0.157416	3.93E-05	1.307	...
8/18/2020 16:27	0.251067	0.251782	0.155217	0.158031	4.34E-05	1.308	...
8/19/2020 19:27	-0.13654	-0.14112	0.154602	0.157396	3.89E-05	1.287	...
8/20/2020 16:27	-0.20837	-0.20671	0.154502	0.157304	3.85E-05	1.291	...
8/21/2020 17:10	-0.11062	-0.11566	0.154641	0.157435	3.84E-05	1.288	...
8/22/2020 10:40	-0.15852	-0.16036	0.154512	0.157308	3.86E-05	1.284	...
8/25/2020 15:40	-0.00172	0.002301	0.154788	0.157599	4E-05	1.295	...
8/27/2020 23:16	0.132787	0.13684	0.155034	0.15785	4.08E-05	1.275	...
8/28/2020 11:16	0.04456	0.046158	0.154845	0.157653	3.99E-05	1.277	...

...

Note
The Smart Meter Verification log displays only in English.

15.1.3 Totalizer log

The totalizer log can track four configurable totals. The period is configurable; you can configure the transmitter to save totalizer and inventory values at a user-specified interval and then generate a totalizer log. The totalizer log is an ASCII file.

Contents of totalizer log

The totalizer log contains one record for each logged totalizer or inventory value. Each record contains the following information:

- Default totalizer or inventory name (user-specified names are not used)
- Value and measurement unit
- Timestamp

— Format: Military time

— Time and time zone: Transmitter clock

The totalizer log also contains a line item for each totalizer or inventory reset.

Totalizer logs and power cycles

If the transmitter is rebooted or power-cycled, the totalizer log is not affected.

Totalizer logs and configuration files

If you restore the factory configuration or upload a configuration file, the totalizer log is not affected.

Example: Totalizer log

```
==============================================================================
Device UID: 22729F1F                    Device Tag: SUPPLY
Name                Value               Units               Time Zone: GMT-7.00
==============================================================================
Mass Fwd Total      61.74707            grams               9/12/2020 20:00
Mass Fwd Inv        61.74705            grams               9/12/2020 20:00
Mass Fwd Total      61.74707            grams               9/12/2020 21:00
Mass Fwd Inv        61.74705            grams               9/12/2020 21:00
Mass Fwd Total      61.74707            grams               9/12/2020 22:00
Mass Fwd Inv        61.74705            grams               9/12/2020 22:00
Mass Fwd Total      61.74707            grams               9/12/2020 23:00
Mass Fwd Inv        61.74705            grams               9/12/2020 23:00
Mass Fwd Total      61.74707            grams               9/13/2020 0:00
Mass Fwd Inv        61.74705            grams               9/13/2020 0:00
...
```

Note
The totalizer history displays only in English.

Read contract totals

You can read contract totals for the current 24-hour contract period and for the previous 24-hour contract period. Depending on the configuration of the totalizer log, you may be able to read contract totals for earlier periods.

The contract totals are derived from existing inventories. However, they are reset automatically at the beginning of each contract period. Therefore, the values shown will probably not match the values shown for the inventories.

Important
You can reset inventories manually, and you can stop and start inventories manually. However, if you do this, data for the current contract period will not reflect the entire 24-hour period. Data for earlier contract periods is not affected.

- The contract totals for the current contract period are stored in the **Today's Total [1-4]** parameters.
- The contract totals for the previous contract period are stored in the **Yesterday's Total [1-4]** parameters.
- The contract totals from earlier contract periods can be read in the totalizer log.

Configure contract totals into the totalizer log

The transmitter can be configured to store contract totals to the totalizer log. This allows you to access totals from earlier contract periods. Otherwise, the transmitter maintains data for only the current contract period (today) and the immediately preceding contract period (yesterday).

Procedure

1. Navigate to the **Totalizer Log**.

Option	Description
Display	**Menu** → **Configuration** → **Totalizer Log**
ProLink III	**Device Tools** → **Configuration** → **Totalizer Log**
Field communicator	Not available

2. Set **Log Total 1**, **Log Total 2**, **Log Total 3**, and/or **Log Total 4** to the desired contract total.

   You can configure the totalizer history log to include both Advanced Phase Measurement and standard totals.

15.2 Generate service files

The transmitter automatically saves several types of service data that is useful in troubleshooting, device maintenance, and administration. You can view the data by generating a service file and downloading it to a USB drive, then using your PC to open the file.

Prerequisites

The service port must be enabled. It is enabled by default. However, if you need to enable it, choose **Menu** → **Configuration** → **Security** and set **Service Port** to On.

You must have a USB drive.

Procedure

1. **WARNING**
   If the transmitter is in a hazardous area, do not remove the housing cover while the transmitter is powered up. Failure to follow these instructions can cause an explosion resulting in injury or death.

   Open the wiring compartment on the transmitter and insert the USB drive into the service port.
2. Choose **Menu** → **USB Options** → **Transmitter –> USB** → **Download Service Files**.
3. Select the service file that you want to generate.

Service file	Description	File name
Configuration Audit Log	All changes to configuration, including changes made by procedures such as zero calibration or density calibration.	`ConfgAuditLog.txt`
Alert History	All occurrences of alerts and conditions, independent of alert severity.	`AlertLog.txt`
Historian: 30 Days	5-minute average values for selected process and diagnostic variables for the last 30 days.	Concatenated from transmitter tag and date
Historian: 1 Day	Values of selected process and diagnostic variables for the last 24 hours, recorded at 1-second intervals.	Concatenated from transmitter tag and date
SMV: 20 Runs	Test data from the 20 most recent SMV tests.	`SmvLast20Data.csv`
Service Snapshot	An ASCII file containing a snapshot of the transmitter's internal database. This file is used by customer service.	`service.dump`
Factory Config File	The configuration file created for this transmitter at the factory.	`FactoryConfig.cfg`
Assert Log	A troubleshooting file used by customer service.	`AssertLog.txt`
Support Contact	A PDF file containing information for contacting customer service.	`SupportContact.pdf`
Security Log	A record of events that might indicate tampering.	`SecurityLog.txt`

4. Specify the folder on the USB drive where the log file will be saved.

15.2.1 Alert history and log

The transmitter automatically saves information about all alert occurrences to its working memory, and periodically updates an alert history file on its SD card. The alert history log is an ASCII file.

Contents of alert history

The alert history in the transmitter's working memory contains the 1000 most recent alert records. Each alert record contains the following information:

- Name of alert or condition
- Category:
  - F=Failure
  - FC=Function Check
  - M=Maintenance Required
  - OOS=Out of Specification
  - I=Ignore
- Action:
  - Active=Transition from inactive to active
  - Inactive=Transition from active to inactive

  - Toggling=More than 2 transitions in the last 60 seconds
- Timestamp
  - Format: Military time
  - Time and time zone: Transmitter clock
  - Not displayed if Action=Toggling

Alert history and power-cycles

If the transmitter is rebooted or power-cycled, the 20 most recent records in alert history are retained in the transmitter's working memory. All earlier records are cleared from working memory. The alert history file on the SD card is not cleared.

Alert history and configuration files

If you restore the factory configuration or upload a configuration file, alert history is not affected.

15.2.2 Configuration audit history and log

The transmitter automatically saves information about all configuration events to its working memory. The configuration audit log is an ASCII file.

Contents of configuration audit log

The configuration audit log contains a record for every change to transmitter configuration, including changes resulting from zero calibration, density calibration, etc. Each record contains:

- Modbus location in transmitter memory
  - C*nnn* = Coil
  - R*nnn* = Register
  - R*nnn xxx* = Array, indexed by register *xxx*
- Name of Modbus location
- Original value
- New value
- Measurement unit, if applicable
- Timestamp
  - Format: Military time
  - Time and time zone: Transmitter clock
- Host or protocol from which the change was made

Configuration audit history and power-cycles

If the transmitter is power-cycled or rebooted, the event is logged in the configuration audit history. Earlier records are not affected.

Configuration audit history and configuration files

If you restore the factory configuration or upload a configuration file, the event is logged in the configuration audit history. Earlier records are not affected.

Example: Configuration audit log

==========

Device UID: 22729F1F

Device Tag: SUPPLY

Addr	Name	Old Value	New Value	Unit	Time Zone: GMT-7:00	Host
C167	SYS_CfgFile_Re	0	1		09/SEP/2019 11:35:11	Display
C167	SYS_CfgFile_Re	0	0		09/SEP/2019 11:35:12	Other
1167	IO_ChannelB_As	10	4		09/SEP/2019 11:35:12	Other
351	SNS_API2540Tab	81	100		09/SEP/2019 11:35:12	Other
40	SNS_DensityUni	91	92		09/SEP/2019 11:35:12	Other
44	SNS_PressureUn	6	12		09/SEP/2019 11:35:12	Other
14	FO_1_Source	0	5		09/SEP/2019 11:35:12	Other
1180	MAI_Source	251	55		09/SEP/2019 11:35:12	Other
275	MAI_mA20Var	0	250.0	°C	09/SEP/2019 11:35:12	Other
4961	FO_2_Source	0	5		09/SEP/2019 11:35:12	Other
68	SYS_Tag	FT-0000	SUPPLY		09/SEP/2019 11:35:12	Other
159	SNS_K1	1606.9	1606.4		09/SEP/2019 11:35:12	Other
161	SNS_K2	1606.9	7354		09/SEP/2019 11:35:12	Other
163	SNS_DensityTem	5.66	4.44		09/SEP/2019 11:35:12	Other

...

Note
The configuration audit log displays only in English.

15.2.3 Assert history and log

The transmitter automatically saves information about all asserts. You can generate an assert log for use by customer service. The assert log is an ASCII file.

Contents of assert log

The assert history contains the 1000 most recent asserts. An assert is an unusual event in the transmitter firmware that may indicate an error or malfunction. A list of asserts can be useful for troubleshooting by customer service. The assert log is not designed for customer use.

Assert history and power-cycles

Assert history is not affected by reboots or power-cycles.

Assert history and configuration files

If you restore the factory configuration or upload a configuration file, assert history is not affected.

15.2.4 Security log

The transmitter automatically saves data that helps determine if someone is tampering with the device. Counters are maintained to track the number of illegal configuration change requests, firmware upgrade failures, and failures to enter the display password. The security log is an ASCII file.

Contents of security log

The security log contains a summary of security events that have occurred since the last transmitter reboot. The following items are included:

- Device information
- Timestamp
  - Format: Military time
  - Time and time zone: Transmitter clock
- Number of password entry failures
- Number of transmitter firmware upgrade failures
- Number of database write failures

Security log and power-cycles

If the transmitter is rebooted or power-cycled, the security log is not affected.

Security log and configuration files

If you attempt to restore the factory configuration or upload a configuration file when write-protection is enabled, the Database Write Failures counter is increased.

Example: Security log file

TAG:SUPPLY	UID:22729F1F	SW:0045	DATE:23/SEP/2019 14:42:58
Device:Config I/O		GMT-7.0 DST:DST Zone:(UTC-7:00) Denver	
Addr		Name	Value

5851	Password Failures	0
5852	SW Upgrade Failures	0
5853	Database Write Failures	25636

Note
The security log displays only in English.

16 Troubleshooting

16.1 Status LED and device status

The status LED (**MOD STATUS**) on the transmitter display provides a quick indication of device status by changing color and flashing. If the transmitter was ordered without a display, the LEDs on the outputs board inside the transmitter provide the same information.

Table 16-1: Status LED and device status

Status LED condition	Device status
Solid green	No alerts are active.
Solid yellow	One or more alerts are active with **Alert Severity** = Out of Specification, Maintenance Required, or Function Check.
Solid red	One or more alerts are active with **Alert Severity** = Failure.
Flashing yellow (1 Hz)	The `Function Check in Progress` alert is active.

16.2 API Referral troubleshooting

16.2.1 Extrapolation alert is active

Cause

Line pressure, line temperature, or line density is outside the range of the configured API table.

Recommended actions

1. Check your process conditions against the values reported by the device.
2. Verify the configuration of the API Referral application and related parameters.

16.2.2 Inaccurate referred density reading

Cause

- Inaccurate density measurement
- Inaccurate temperature measurement
- Incorrect reference conditions
- Incorrect API table selection

Recommended actions

1. Verify the line density value.
2. Verify the line temperature value.
3. Ensure that the application is configured to use the appropriate temperature source.
4. Ensure that the pressure source is configured correctly, that the external pressure device is operating correctly, and that both devices are using the same measurement units.

5. Ensure that reference temperature and reference pressure, if applicable, are configured correctly.
6. Ensure that the selected API table is appropriate for the process fluid.

16.3 Batch troubleshooting

16.3.1 Batch will not start

Cause

- Previous batch not ended
- Valve is closed but the transmitter is detecting flow
- No discrete output configured for batch control
- For two-stage batching, primary and secondary valves are not configured

Recommended actions

1. End the batch.
2. Check for two-phase flow.
3. Verify the zero.
4. Verify the cutoffs.
5. Set up a channel to operate as a discrete output, and configure it for batch control.
6. For two-stage batching, configure the primary and secondary valves.

16.3.2 Valve operation is backwards

Cause

- Discrete Output wiring is incorrect
- Discrete Output polarity is reversed

Recommended actions

1. Verify the wiring between the Discrete Output and the valve. The ON signal must open the valve. Perform a loop test.
2. Change the setting of **Discrete Output Polarity**.

16.3.3 Valve does not operate

Cause

- Discrete Output wiring is incorrect
- Discrete Output channel is set up for internal power

Recommended actions

1. Verify the wiring between the Discrete Output and the valve. The ON signal must open the valve. Perform a loop test.
2. Ensure that the channel is wired and configured for external power.

3. Ensure that the valve and channel are powered.

16.3.4 Batch totals are inaccurate

Cause

- Batch target is incorrect
- AOC is inaccurate
- Flow measurement needs adjustment

Recommended actions

1. Verify that the correct batch preset is active.
2. Verify that the batch target is set correctly.
3. If you have recently changed the batch target, run a few batches and wait for the AOC value to adjust.
4. Repeat AOC calibration.
5. Adjust the fixed AOC value.
6. Compare the batch total to a scale reading.

16.3.5 Batch repeat not satisfactory

Cause

- AOC is inaccurate
- Inconsistent or leaking valve
- Process is unstable

Recommended actions

1. Inspect the valve and replace if necessary.
2. Repeat AOC calibration.
3. Ensure that line pressure is stable.
4. Ensure that bowl level is approximately constant.
5. Ensure that the pump is not causing unstable flow.

16.4 Concentration measurement troubleshooting

16.4.1 Significantly incorrect CM after loading matrix

Cause

The wrong temperature or density unit was configured when the matrix was loaded.

Recommended actions

Set the temperature and density units to the units used when the matrix was built, then reload the matrix.

For custom matrices, contact customer support.

16.4.2 Inaccurate CM reading

Cause

- Inaccurate density measurement
- Inaccurate temperature measurement
- Incorrect reference conditions
- Incorrect matrix data
- Inappropriate trim values

Recommended actions

1. Verify the line density value.
2. Verify the line temperature value.
3. Ensure that the application is configured to use the appropriate temperature source.
4. Ensure that reference temperature is configured correctly.
5. Ensure that the appropriate matrix is active.
6. Ensure that the matrix is configured correctly.
7. Adjust the extrapolation limits for the active matrix.
8. Adjust measurement with a concentration offset trim.

16.5 Density measurement troubleshooting

16.5.1 Erratic density reading

Cause

- Normal process noise
- Two-phase flow
- Line pressure too low
- The flow rate is too high for the installation
- Pipe diameter too small
- Contaminants or suspended solids in the process gas
- Contaminants or suspended solids in the process fluid
- Vibration in the pipeline
- Erosion or corrosion

Recommended actions

1. Check your process conditions against the values reported by the device.
2. Increase the density damping value.

3. Decrease the flow rate.
4. Check for two-phase flow.
5. Ensure that line pressure or sample pressure meets installation requirements.
6. Increase back pressure to minimize bubble formation.
7. Minimize vibration in the pipeline.
8. Increase the pipe diameter.
9. Install a flow control method (bypass, flow chamber, expander, etc.).
10. Perform Smart Meter Verification.

16.5.2 Inaccurate density reading

Cause

- Problem with process fluid
- Incorrect density calibration factors
- Wiring problem
- Incorrect grounding
- Two-phase flow
- Plugged or coated sensor tube
- Incorrect sensor orientation
- RTD failure
- Physical characteristics of sensor have changed

Recommended actions

1. Check the wiring between the sensor and the transmitter.
2. Check the grounding of all components.
3. Check your process conditions against the values reported by the device.
4. Ensure that all of the calibration parameters have been entered correctly. See the sensor tag or the calibration sheet for your meter.
5. Check for two-phase flow.
6. If two sensors with similar frequency are too near each other, separate them.
7. Purge the sensor tubes.
8. Perform Smart Meter Verification.

16.5.3 Unusually high density reading

Cause

- Plugged or coated sensor tube
- Incorrect density calibration factors
- Inaccurate temperature measurement
- RTD failure

- In high-frequency meters, erosion, or corrosion
- In low-frequency meters, tube fouling

Recommended actions

1. Ensure that all of the calibration parameters have been entered correctly.
   See the sensor tag or the calibration sheet for your meter.
2. Purge the sensor tubes.
3. Check for coating in the flow tubes.
4. Perform Smart Meter Verification.

16.5.4 Unusually low density reading

Cause

- Two-phase flow
- Incorrect calibration factors
- In low-frequency meters, erosion or corrosion

Recommended actions

1. Check your process conditions against the values reported by the device.
2. Verify all of the characterization or calibration parameters. See the sensor tag or the calibration sheet for your meter.
3. Check the wiring between the sensor and the transmitter.
4. Check for tube erosion, especially if the process fluid is abrasive.
5. Perform Smart Meter Verification.

16.6 Discrete Output troubleshooting

16.6.1 No Discrete Output

Cause

- Output not powered
- Wiring problem
- Channel not configured for desired output
- Channel not licensed
- Circuit failure

Recommended actions

1. Check the power supply and power supply wiring.
2. Verify the output wiring.
3. Verify that the channel is wired and configured as a Discrete Output.
4. Purchase a license for the channel and upgrade the transmitter firmware.

5. Contact customer service.

16.6.2 Loop test failed

Cause

- Output not powered
- Power supply problem
- Wiring problem
- Circuit failure

Recommended actions

1. Check the power supply and power supply wiring.
2. Verify the output wiring.
3. Contact customer service.

16.6.3 Discrete Output readings reversed

Cause

- Wiring problem
- Configuration does not match wiring

Recommended actions

1. Verify the output wiring.
2. Ensure that **Discrete Output Polarity** is set correctly.

16.7 Flow measurement troubleshooting

16.7.1 Flow rate reported as zero when flow is present

Cause

The process condition is below cutoff.

Recommended action

Verify the cutoffs.

16.7.2 Flow indication at no flow conditions or zero offset

Cause

- Misaligned piping (especially in new installations)
- Open or leaking valve
- Incorrect sensor zero

Recommended actions

1. Verify all of the characterization or calibration parameters.
   See the sensor tag or the calibration sheet for your meter.
2. If the reading is not excessively high, review the live zero. You may need to restore the factory zero.
3. Check for open or leaking valves or seals.
4. Check for mounting stress on the sensor (e.g., sensor being used to support piping, misaligned piping).
5. Contact customer service.

16.7.3 Erratic non-zero flow rate at no-flow conditions

Cause

- Leaking valve or seal
- Two-phase flow
- Plugged or coated sensor tube
- Incorrect sensor orientation
- Wiring problem
- Vibration in pipeline at rate close to sensor tube frequency
- Damping value too low
- Mounting stress on sensor

Recommended actions

1. Verify that the sensor orientation is appropriate for your application.
   See the installation manual for your sensor.
2. Check the drive gain and the pickoff voltage.
3. If the wiring between the sensor and the transmitter includes a 9-wire segment, verify that the 9-wire cable shields are correctly grounded.
4. Check the wiring between the sensor and the transmitter.
5. For sensors with a junction box, check for moisture in the junction box.
6. Purge the sensor tubes.
7. Check for open or leaking valves or seals.
8. Check for sources of vibration.
9. Verify damping configuration.
10. Verify that the measurement units are configured correctly for your application.
11. Check for two-phase flow.
12. Check for radio frequency interference.
13. Contact customer service.

16.7.4 Erratic non-zero flow rate when flow is steady

Cause

- Two-phase flow
- Damping value too low
- Plugged or coated sensor tube
- Wiring problem
- Problem with receiving device

Recommended actions

1. Verify that the sensor orientation is appropriate for your application.
   See the installation manual for your sensor.
2. Check the drive gain and the pickoff voltage.
3. If the wiring between the sensor and the transmitter includes a 9-wire segment, verify that the 9-wire cable shields are correctly grounded.
4. Check for air entrainment, tube fouling, flashing, or tube damage.
5. Check the wiring between the sensor and the transmitter.
6. For sensors with a junction box, check for moisture in the junction box.
7. Purge the sensor tubes.
8. Check for open or leaking valves or seals.
9. Check for sources of vibration.
10. Verify damping configuration.
11. Verify that the measurement units are configured correctly for your application.
12. Check for two-phase flow.
13. Check for radio frequency interference.
14. Contact customer service.

16.7.5 Inaccurate flow rate

Cause

- Wiring problem
- Inappropriate measurement unit
- Incorrect flow calibration factor
- Incorrect meter factor
- Incorrect density calibration factors
- Incorrect grounding
- Two-phase flow
- Problem with receiving device
- Incorrect sensor zero

Recommended actions

1. Check the wiring between the sensor and the transmitter.
2. Verify that the measurement units are configured correctly for your application.
3. Verify all of the characterization or calibration parameters. See the sensor tag or the calibration sheet for your meter.
4. Zero the meter.
5. Check the grounding of all components.
6. Check for two-phase flow.
7. Verify the receiving device, and the wiring between the transmitter and the receiving device.
8. Check the sensor coils for electrical shorts. If you find problems, replace the sensor.
9. Replace the core processor or transmitter.

16.8 Frequency Output troubleshooting

16.8.1 No FO

Cause

- Stopped totalizer
- Process condition below cutoff
- Fault condition if **Fault Action** is set to Internal Zero or Downscale
- Two-phase flow
- Flow in reverse direction from configured flow direction parameter
- **Frequency Output Direction** not set correctly
- Bad frequency receiving device
- Output level not compatible with receiving device
- Bad output circuit
- Output not powered
- Wiring problem
- Channel not configured for desired output
- Channel not licensed

Recommended actions

1. Verify that the process conditions are below the low-flow cutoff. Reconfigure the low-flow cutoff if necessary.
2. Check the **Fault Action** settings.
3. Verify that the totalizers are not stopped. A stopped totalizer will cause the Frequency Output to be locked.
4. Check for two-phase flow.
5. Check flow direction.

6. Check the direction parameters.
7. Verify the receiving device, and the wiring between the transmitter and the receiving device.
8. Verify that the channel is wired and configured as a Frequency Output.
9. Purchase a license for the channel and upgrade the transmitter firmware.
10. Perform a loop test.

16.8.2 Consistently incorrect FO measurement

Cause

- Output not scaled correctly
- Incorrect measurement unit configured for process variable

Recommended actions

1. Check the scaling of the Frequency Output.
2. Verify that the measurement units are configured correctly for your application.

16.8.3 Erratic FO

Cause

There is Radio Frequency Interference (RFI) from the environment.

Recommended action

Check for radio frequency interference.

16.8.4 FO goes in and out of fault conditions

Cause

There is a problem with the interaction between the Output Saturated alert and the fault action configured for the output.

Recommended actions

1. Change the severity of the Output Saturated alert from Fault to another option.
2. Configure the transmitter to ignore the Output Saturated alert or the relevant conditions.
3. Change the configuration of **Fault Action** from Downscale to another option.

16.9 mA Output troubleshooting

16.9.1 No mAO

Cause

- Output not powered
- Power supply problem

- Wiring problem
- Circuit failure
- Channel not configured for desired output or input
- Channel not licensed
- Incorrect power configuration

Recommended actions

1. If applicable, check the output wiring to verify that the output is powered.
2. Check the power supply and power supply wiring.
3. Verify the output wiring.
4. Check the **Fault Action** settings.
5. Verify channel configuration for the affected mA Output.
6. Purchase a license for the channel and upgrade the transmitter firmware.
7. Measure DC voltage across output terminals to verify that the output is active.
8. Contact customer service.

16.9.2 Loop test failed

Cause

- Output not powered
- Power supply problem
- Wiring problem
- Circuit failure
- Channel not configured for desired output
- Incorrect power configuration

Recommended actions

1. Check the power supply and power supply wiring.
2. Verify the output wiring.
3. Check the **Fault Action** settings.
4. Verify channel configuration for the affected mA Output.
5. Contact customer service.

16.9.3 mAO below 4 mA

Cause

- Output not powered
- Open in wiring
- Bad output circuit
- Process condition below LRV

- LRV and URV are not set correctly
- Fault condition if **Fault Action** is set to Internal Zero or Downscale
- Bad mA receiving device

Recommended actions

1. Check your process conditions against the values reported by the device.
2. Verify the receiving device, and the wiring between the transmitter and the receiving device.
3. Check the settings of **Upper Range Value** and **Lower Range Value**.
4. Check the **Fault Action** settings.
5. Verify channel configuration for the affected mA Output.

16.9.4 Constant mAO

Cause

- Incorrect process variable assigned to the output
- Fault condition exists
- Non-zero HART address (mA Output 1)
- A loop test is in progress
- Zero calibration failure
- mA Output Direction not set correctly

Recommended actions

1. Verify the output variable assignments.
2. View and resolve any existing alert conditions.
3. Check the direction parameters.
4. Check the HART address and **mA Output Action** (**Loop Current Mode**).
5. Check to see if a loop test is in process (the output is fixed).
6. Check HART burst mode configuration.
7. If related to a zero calibration failure, reboot or power-cycle the transmitter and retry the zeroing procedure.

16.9.5 mAO consistently out of range

Cause

- Incorrect process variable or units assigned to output
- Fault condition if **Fault Action** is set to Upscale or Downscale
- LRV and URV are not set correctly

Recommended actions

1. Verify the output variable assignments.
2. Verify the measurement units configured for the output.

3. Check the **Fault Action** settings.
4. Check the settings of **Upper Range Value** and **Lower Range Value**.
5. Check the mA Output trim.

16.9.6 Consistently incorrect mA measurement

Cause

- Loop problem
- Output not trimmed correctly
- Incorrect measurement unit configured for process variable
- Incorrect process variable configured
- LRV and URV are not set correctly
- mA Output Direction not set correctly

Recommended actions

1. Check the mA Output trim.
2. Verify the measurement units configured for the output.
3. Verify the process variable assigned to the mA Output.
4. Check the direction parameters.
5. Check the settings of **Upper Range Value** and **Lower Range Value**.

16.9.7 mAO correct at lower current, but incorrect at higher current

Cause

The mA loop resistance may be set too high.

Recommended actions

Verify that the mA Output load resistance is below the maximum supported load.
See the installation manual for your transmitter.

16.9.8 mAO goes in and out of fault conditions

Cause

There is a problem with the interaction between the Output Saturated alert and the fault action configured for the output.

Recommended actions

1. Change the severity of the Output Saturated alert from Fault to another option.
2. Configure the transmitter to ignore the Output Saturated alert or the relevant conditions.
3. Change the configuration of **Fault Action** from Downscale to another option.

16.10 Status alerts, causes, and recommendations

Not all of these alerts may apply to your type of transmitter.

16.10.1 [002] RAM Error (Core Processor)

Alert

Electronics Failed

Cause

There is an internal memory problem with the core processor. This alert will not clear until you reboot or power cycle the transmitter.

Recommended actions

1. Ensure that all wiring compartment covers are installed correctly.
2. Ensure that all transmitter wiring meets specifications and that all cable shields are properly terminated.
3. Check the drain wires.
4. Check the drain wires.
   a) Verify that the drain wires from the 4-wire cable are properly landed.
   b) Verify that the drain wires are landed outside the core processor housing.
   c) If the drain wires are landed inside the core processor housing, cover them by the foil shield for their full length until they land under the ground screw.
5. Ensure that all meter components are grounded properly.
6. Evaluate the environment for sources of high electromagnetic interference (EMI) and relocate the transmitter or wiring as necessary.
7. Reboot or power-cycle the transmitter to see if the alert clears.
8. Replace the core processor.

16.10.2 [003] Sensor Failed

Alert

Sensor Failed

Cause

The pickoff amplitude is too low.

Recommended actions

1. Check the drive gain and the pickoff voltage.
2. Check the wiring between the sensor and the transmitter.
3. Check the sensor coils for electrical shorts. If you find problems, replace the sensor. Refer to Check for internal electrical problems.
4. Check the integrity of the sensor tubes.

5. Ensure that the sensor is completely full or completely empty.
6. Replace the sensor.
7. Contact customer service.

16.10.3 [005] Mass Flow Rate Overrange

Alert

Extreme Primary Purpose Variable

Cause

The measured flow is outside the sensor's flow limits.

Recommended actions

1. Check your process conditions against the values reported by the device.
2. Verify that the transmitter is configured correctly for the connected sensor.
3. Check for two-phase flow.
   Refer to Check for two-phase flow (slug flow).
4. Contact customer service.

16.10.4 [008] Density Overrange

Alert

Extreme Primary Purpose Variable

Cause

The measured density is above 10 g/cm^3.

Recommended actions

1. If other alerts are present, resolve those alert conditions first.
2. Check your process conditions against the values reported by the device.
3. Verify that the transmitter is configured correctly for the connected sensor.
4. Check for two-phase flow by checking for two-phase alerts. If two-phase flow is the problem, alerts will be posted.
5. Verify all of the characterization or calibration parameters.
   See the sensor tag or the calibration sheet for your meter.
6. Check the sensor coils for electrical shorts. If you find problems, replace the sensor.
7. Check the drive gain and the pickoff voltage.
8. Perform Smart Meter Verification.
9. Contact customer service.

16.10.5 [009] Transmitter Initializing/ Warming Up

Alert

Transmitter Initializing

Cause

The transmitter is in power-up mode.

Recommended actions

1. Allow the meter to complete its power-up sequence. The alert should clear automatically.
2. If the alert does not clear:
   a) Measure the voltage at the core processor terminals and ensure that it is receiving a minimum of 11.5 volts at all times. If it is not, verify the power wiring to the transmitter.
   b) Verify that the tubes are full of process fluid.
   c) Check the wiring between the sensor and the transmitter.

16.10.6 [010] Calibration Failed

Alert

Function Check Failed or Smart Meter Verification Aborted

Cause

The calibration failed.

Recommended actions

1. Ensure that your calibration procedure meets the documented requirements.
2. Reboot or power-cycle the transmitter.
3. Retry the procedure.

16.10.7 [016] Sensor Temperature (RTD) Failure

Alert

Sensor Failed

Cause

The value computed for the resistance of the line RTD is outside limits.

Recommended actions

1. Check the wiring between the sensor and the transmitter.
   a) Refer to the installation manual and ensure that the wiring has been performed according to instructions. Obey all applicable safety messages.
   b) Verify that the wires are making good contact with the terminals.

c) Perform RTD resistance checks and check for shorts to case. If you find problems, replace the sensor.

d) Check the continuity of all wires from the transmitter to the sensor.

2. Check your process conditions against the values reported by the device.
3. Check the feedthrough pins. Contact customer service for assistance. If you find problems, replace the sensor.
4. Check the core processor housing for moisture, corrosion, or verdigris.
5. Check the junction box for moisture, corrosion, or verdigris.
6. Contact customer service.

16.10.8 [017] Sensor Case Temperature (RTD) Failure

Alert

Sensor Failed

Cause

The values computed for the resistance of the meter and case RTDs are outside limits.

Recommended actions

1. Check the wiring between the sensor and the transmitter.
   a) Refer to the installation manual and ensure that the wiring has been performed according to instructions. Obey all applicable safety messages.

   b) Verify that the wires are making good contact with the terminals.

   c) Perform RTD resistance checks and check for shorts to case. If you find problems, replace the sensor.

   d) Check the continuity of all wires from the transmitter to the sensor.

2. Check your process conditions against the values reported by the device.
3. Contact customer service.

16.10.9 [018] EEPROM Error (Transmitter)

Alert

Electronics Failed

Cause

There is an internal memory problem with the transmitter.

Recommended actions

1. Ensure that all wiring compartment covers are installed correctly.
2. Ensure that all transmitter wiring meets specifications and that all cable shields are properly terminated.
3. Check the drain wires.

a) Verify that the drain wires from the 4-wire cable are properly landed.

b) Verify that the drain wires are landed outside the core processor housing.

c) If the drain wires are landed inside the core processor housing, cover them by the foil shield for their full length until they land under the ground screw.

4. Ensure that all meter components are grounded properly.
5. Evaluate the environment for sources of high electromagnetic interference (EMI) and relocate the transmitter or wiring as necessary.
6. Power-cycle the transmitter to see if the alert clears.

Important
This alert will not clear until you cycle power to the meter.

7. If the alert persists, replace the transmitter.

16.10.10 [019] RAM Error (Transmitter)

Alert

Electronics Failed

Cause

There is a ROM checksum mismatch in the transmitter or the RAM address location cannot be written in the transmitter. This alert will not clear until you reboot or power cycle the transmitter.

Recommended actions

1. Ensure that all wiring compartment covers are installed correctly.
2. Ensure that all transmitter wiring meets specifications and that all cable shields are properly terminated.
3. Check the drain wires.

a) Verify that the drain wires from the 4-wire cable are properly landed.

b) Verify that the drain wires are landed outside the core processor housing.

c) If the drain wires are landed inside the core processor housing, cover them by the foil shield for their full length until they land under the ground screw.

4. Ensure that all meter components are grounded properly.
5. Evaluate the environment for sources of high electromagnetic interference (EMI) and relocate the transmitter or wiring as necessary.
6. Reboot or power-cycle the transmitter to see if the alert clears.
7. If the alert persists, replace the transmitter.

16.10.11 [020] Calibration Factors Missing

Alert

Configuration Error

Cause

Some calibration factors have not been entered or are incorrect.

Recommended actions

1. Verify characterization parameters (specifically Flow Cal Factor and K1 values). Refer to Characterize the meter (if required).
2. Verify the setting of the **Sensor Type** parameter.
3. If **Sensor Type** = Curved Tube, ensure that no parameters specific to Straight Tube have been set.
4. Check the feedthrough pins. If you find problems, replace the sensor.
   Contact customer service for assistance.
5. Check the core processor housing for moisture, corrosion, or verdigris.
6. Check the junction box for moisture, corrosion, or verdigris.
7. Check the sensor coils for electrical shorts. If you find problems, replace the sensor.

16.10.12 [021] Incorrect Sensor Type

Alert

Configuration Error

Cause

Transmitter verification of sensor circuits and characterization has produced a discrepancy. The transmitter cannot operate the sensor.

Recommended actions

1. Verify the setting of the **Sensor Type** parameter.
2. Verify characterization parameters (specifically Flow Cal Factor and K1 values). Refer to Characterize the meter (if required).
3. Contact customer service.

16.10.13 [022] Configuration Database Corrupt

Alert

Electronics Failed

Cause

There is a NVM checksum mismatch in the core processor's configuration memory. This alert applies to the standard core processor only.

Recommended actions

1. Ensure that all wiring compartment covers are installed correctly.
2. Ensure that all transmitter wiring meets specifications and that all cable shields are properly terminated.
3. Check the drain wires.
   a) Verify that the drain wires from the 4-wire cable are properly landed.

b) Verify that the drain wires are landed outside the core processor housing.

c) If the drain wires are landed inside the core processor housing, cover them by the foil shield for their full length until they land under the ground screw.

4. Ensure that all meter components are grounded properly.
5. Evaluate the environment for sources of high electromagnetic interference (EMI) and relocate the transmitter or wiring as necessary.
6. Reboot or power-cycle the transmitter to see if the alert clears.
7. If the alert persists, replace the core processor.

16.10.14 [024] Program Corrupt (Core Processor)

Alert

Electronics Failed

Cause

There is a checksum mismatch in the core processor's program section. This alert applies to the standard core processor only.

Recommended actions

1. Ensure that all wiring compartment covers are installed correctly.
2. Ensure that all transmitter wiring meets specifications and that all cable shields are properly terminated.
3. Check the drain wires.

   a) Verify that the drain wires from the 4-wire cable are properly landed.

   b) Verify that the drain wires are landed outside the core processor housing.

   c) If the drain wires are landed inside the core processor housing, cover them by the foil shield for their full length until they land under the ground screw.

4. Ensure that all meter components are grounded properly.
5. Evaluate the environment for sources of high electromagnetic interference (EMI) and relocate the transmitter or wiring as necessary.
6. Reboot or power-cycle the transmitter to see if the alert clears.
7. If the alert persists, replace the core processor.

16.10.15 [026] Sensor/Transmitter Communications Failure

Alert

Sensor-Transmitter Communication Error

Cause

The transmitter has lost communication with the core processor, or there have been too many communications errors.

Recommended actions

1. Check the wiring between the sensor and the transmitter.
2. Verify the power to both the transmitter and core processor.
3. Cycle power to the transmitter.
4. If the alert persists:
   a) Replace the core processor.
   b) If that does not solve the problem, restore the original core processor and replace the transmitter.
   c) If that does not solve the problem, replace both the transmitter and the core processor.
5. If the problem persists, contact customer support.

16.10.16 [028] Core Process Write Failure

Alert

Sensor-Transmitter Communication Error

Cause

A write to the core processor failed.

Recommended actions

1. Reboot or power-cycle the transmitter to see if the alert clears.
2. Contact customer service about servicing or replacing the core processor or transmitter.

16.10.17 [030] Incorrect Board Type

Alert

Configuration Error

Cause

The firmware or configuration loaded in the transmitter is incompatible with the board type.

Recommended actions

1. Ensure that the correct board is installed.
2. If this alarm occurred in conjunction with an effort to load a configuration into the transmitter, confirm that the transmitter is of the same model as the one the configuration came from.
3. Reboot or power-cycle the transmitter to see if the alert clears.
4. If the alert persists, replace the transmitter.
5. If the problem persists, contact customer service.

16.10.18 [031] Low Power

Alert

Core Low Power

Cause

The enhanced core processor is not receiving sufficient power. This alert will not clear until you reboot or power cycle the transmitter.

Recommended actions

1. Check the wiring between the sensor and the transmitter.
2. Measure the voltage at the core processor terminals and ensure that it is receiving a minimum of 11.5 volts at all times. If it is not, verify the power wiring to the transmitter.
3. Verify that the transmitter is receiving sufficient power.
   a) If it is not, correct the problem and reboot or power-cycle the transmitter.
   b) If it is, this suggests that the transmitter has an internal power issue. Replace the transmitter.

16.10.19 [033] Insufficient Pickoff Signal

Alert

Tube Not Full

Cause

The signal from the sensor pickoffs is insufficient for operation (enhanced core processor only).

Recommended actions

1. Check for two-phase flow.
2. Check the sensor tubes for plugging or coating.
3. Check for fluid separation by monitoring the density value and comparing the results against expected density values.
4. Ensure that the sensor orientation is appropriate for your application. Settling from a two-phase or three-phase fluid can cause this alert even if the flow tubes are full.

16.10.20 [034] Smart Meter Verification Failed

Alert

Function Check Failed or Smart Meter Verification Aborted

Cause

The current Smart Meter Verification value is statistically different than the factory baseline value.

Recommended actions

Minimize process instability and repeat the test.

16.10.21 [035] Smart Meter Verification Aborted

Alert

Function Check Failed or Smart Meter Verification Aborted

Cause

The Smart Meter Verification test did not complete, possibly because it was manually aborted or because process conditions were too unstable.

Recommended actions

1. Minimize process instability and repeat the test.
2. Check the Smart Meter Verification abort code and take appropriate steps.
3. Contact customer service.

16.10.22 [100] mA Output 1 Saturated

Alert

Output Saturated

Cause

The calculated output value is outside the range of the output.

Recommended actions

1. Check the settings of **Upper Range Value** and **Lower Range Value**.
   Refer to Configure Lower Range Value (LRV) and Upper Range Value (URV) for the mA Output.
2. Check your process conditions against the values reported by the device.
3. Ensure that both devices are using the same measurement unit.
4. Purge the sensor tubes.

16.10.23 [101] mA Output 1 Fixed

Alert

Output Fixed

Cause

One of the following conditions have occurred:

- The HART address is set to a non-zero value
- A loop test is running
- The output is configured to send a constant value (**mA Output Action** or **Loop Current Mode**)

Recommended actions

1. Check the HART address and **mA Output Action**, or **Loop Current Mode**.
2. Check to see if a loop test is in process (the output is fixed).
3. Exit the mA Output trim, if applicable.

16.10.24 [102] Drive Overrange

Alert

Drive Over-Range

Cause

The drive power (current/ voltage) is at its maximum.

Recommended actions

1. Check your process conditions against the values reported by the device.
2. Check for air in the flow tubes, tubes not filled, foreign material in the tubes, coating in the tubes, or other process problems.
3. Verify that the tubes are full of process fluid.
4. Check the drive gain and the pickoff voltage.
   Refer to Check the pickoff voltage.
5. Check the sensor coils for electrical shorts. If you find problems, replace the sensor.
   Refer to Check for internal electrical problems.
6. Ensure that the sensor orientation is appropriate for your application.
   Settling from a two-phase or three-phase fluid can cause this alert even if the flow tubes are full.

16.10.25 [103] Configuration Warning

Alert

Configuration Warning

Cause

The core processor was unable to store the totalizer and inventory values on the last power-down, and must rely on the saved totals. (Standard core processor only)

Recommended actions

Verify that the transmitter is receiving sufficient power.

- If it is not, correct the problem and reboot or power-cycle the transmitter.
- If it is, replace the transmitter because the transmitter has an internal power issue.

16.10.26 [104] Calibration in Progress

Alert

Function Check in Progress

Cause

A calibration is running.

Recommended actions

Allow the test to complete.

16.10.27 [105] Two-Phase Flow

Alert

Process Aberration

Cause

The line density is outside the user-defined two-phase flow limits.

Recommended actions

1. Check for two-phase flow.
   Refer to Configure Lower Range Value (LRV) and Upper Range Value (URV) for the mA Output.
2. Verify that the transmitter is configured correctly for the connected sensor.

16.10.28 [110] Frequency Output 1 Saturated

Alert

Output Saturated

Cause

The calculated output value is outside the range of the output.

Recommended actions

1. Check the scaling of the Frequency Output.
2. Check your process conditions against the values reported by the device.
3. Ensure that both devices are using the same measurement unit.
4. Purge the sensor tubes.

16.10.29 [111] Frequency Output 1 Fixed

Alert

Output Fixed

Cause

The output is configured to send a constant value. A loop test may be in progress.

Recommended actions

Check to see if a loop test is in process (the output is fixed).

16.10.30 [113] mA Output 2 Saturated

Alert

Output Saturated

Cause

The calculated output value is outside the range of the output.

Recommended actions

1. Check the settings of **Upper Range Value** and **Lower Range Value**.
   Refer to Configure Lower Range Value (LRV) and Upper Range Value (URV) for the mA Output.
2. Check your process conditions against the values reported by the device.
3. Ensure that both devices are using the same measurement unit.
4. Purge the sensor tubes.

16.10.31 [114] mA Output 2 Fixed

Alert

Output Fixed

Cause

The output is configured to send a constant value. A loop test may be in progress.

Recommended actions

1. Check to see if a loop test is in process (the output is fixed).
2. Exit the mA Output trim, if applicable.

16.10.32 [115] External Input Error

Alert

Process Aberration

Cause

The connection to an external measurement device has failed. No external data is available.

Recommended actions

1. Verify that the external device is operating correctly.
2. Verify the wiring between the transmitter and the external device.

16.10.33 [116] Temperature Overrange (API Referral)

Alert

Process Aberration

Cause

The line temperature is outside the range of the API table.

Recommended actions

1. Ensure that process temperature is within the range of the API table.

2. Verify the configuration of the API Referral application and related parameters.

16.10.34 [117] Density Overrange (API Referral)

Alert

Process Aberration

Cause

The line density is outside the range of the API table.

Recommended actions

1. Ensure that process density is within the range of the API table.
2. Verify the configuration of the API Referral application and related parameters.

16.10.35 [118] Discrete Output 1 Fixed

Alert

Output Fixed

Cause

The output is configured to send a constant state. A loop test may be in progress.

Recommended actions

Check to see if a loop test is in process (the output is fixed).

16.10.36 [119] Discrete Output 2 Fixed

Alert

Output Fixed

Cause

The output is set to a constant state. A loop test may be in progress.

Recommended actions

Check to see if a loop test is in process (the output is fixed).

16.10.37 [120] Curve Fit Failure (Concentration)

Alert

Configuration Error

Cause

The transmitter was unable to calculate a valid concentration matrix from the current data.

Recommended actions

1. Verify the configuration of the concentration measurement application.
2. Contact customer service.

16.10.38 [121] Extrapolation Alert (Concentration)

Alert

Process Aberration

Cause

The line density or line temperature is outside the range of the concentration matrix plus the configured extrapolation limit.

Recommended actions

1. Ensure that process density and temperature are within the limits of the concentration matrix.
2. Verify the configuration of the concentration measurement application.

16.10.39 [123] Pressure Overrange (API Referral)

Alert

Process Aberration

Cause

The line pressure is outside the range of the API table.

Recommended actions

1. Ensure that process pressure is within the range of the API table.
2. Verify the configuration of the API Referral application and related parameters.

16.10.40 [131] Smart Meter Verification in Progress

Alert

Function Check in Progress

Cause

A Smart Meter Verification test is running.

Recommended actions

Allow the test to complete.

16.10.41 [132] Sensor Simulation Active

Alert

Sensor Being Simulated

Cause

Sensor simulation mode is enabled (enhanced core processor only).

Recommended actions

Disable sensor simulation.

16.10.42 [138] TBR Active

Alert

Process Aberration

Cause

Drive gain is above the configured threshold and transient bubble remediation is active.

Recommended actions

Check for air entrainment, tube fouling, flashing, or tube damage.

16.10.43 Batcher Not Configured

Alert

Configuration Error

Cause

One or more of the following has occurred:

- The batcher application is disabled
- No flow source has been configured for the batcher application
- The batch target is 0
- No Discrete Output is assigned to batch control.

Recommended actions

Verify the configuration of the batcher application and related parameters.

16.10.44 Batch Time Out

Alert

Process Aberration

Cause

The batch exceeded **Maximum Batch Time**, and ended before the target was reached.

Recommended actions

Verify the configuration of the batcher application and related parameters.

16.10.45 Clock Failure

Alert

Data Loss Possible

Cause

The transmitter's real-time clock is not incrementing.

Recommended actions

Contact customer service.

16.10.46 Core Processor Update Failed

Alert

Configuration Error

Cause

The core processor software update failed.

Recommended actions

1. Resolve any active alerts.
2. Check the connection between the transmitter and the core processor.
3. Reboot or power-cycle the transmitter, then retry the procedure.
4. Contact customer service.

16.10.47 Enhanced Event *X* Active

Alert

Event Active

Cause

The conditions assigned to any enhanced event (Enhanced Event 1 through Enhanced Event 5) are present.

Recommended actions

1. If this is an accurate indication of process conditions, no action is required. The alert will clear when the process returns to normal.
2. Review event configuration if you believe the event was triggered erroneously.

16.10.48 Event *X* Active

Alert

Event Active

Cause

The conditions assigned to either Basic Event 1 or Basic Event 2 are present.

Recommended actions

1. If this is an accurate indication of process conditions, no action is required. The alert will clear when the process returns to normal.
2. Review event configuration if you believe the event was triggered erroneously.

16.10.49 Frequency Output 2 Fixed

Alert

Output Fixed

Cause

The output is configured to send a constant value. A loop test may be in progress.

Recommended actions

Check to see if a loop test is in process (the output is fixed).

16.10.50 mA Output 3 Fixed

Alert

Output Fixed

Cause

The output is configured to send a constant value. A loop test may be in progress.

Recommended actions

1. Check to see if a loop test is in process (the output is fixed).
2. Exit mA Output trim, if applicable.

16.10.51 mA Output 3 Saturated

Alert

Output Saturated

Cause

The calculated output value is outside the range of the output.

Recommended actions

1. Check the settings of **Upper Range Value** and **Lower Range Value**.
   Refer to Configure Lower Range Value (LRV) and Upper Range Value (URV) for the mA Output.
2. Check your process conditions against the values reported by the device.
3. Ensure that both devices are using the same measurement unit.
4. Purge the sensor tubes.

16.10.52 Moderate Phase Severity

Alert

Process Aberration

Cause

The transmitter has detected moderate two-phase severity.

Recommended actions

Check your process conditions against the values reported by the device.

16.10.53 Moderate Two Phase Flow

Alert

Process Aberration

Cause

The transmitter has detected moderate two-phase flow.

Recommended actions

Check your process conditions against the values reported by the device.

16.10.54 No Permanent License

Alert

Data Loss Possible

Cause

A permanent license has not been installed in the transmitter firmware.

Recommended actions

1. If you have a permanent license, install it.
2. If you do not have a permanent license, contact customer service.

16.10.55 Password Not Set

Alert

Configuration Error

Cause

Display security has been enabled but the display password has not been changed from the default value.

Recommended actions

Configure a password or disable display security.

16.10.56 SD Card Failure

Alert

Data Loss Possible

Cause

The transmitter's SD card has failed.

Recommended actions

1. Make sure that the SD card is firmly seated in the socket.
2. Contact customer service.

16.10.57 SD Card Full

Alert

Data Loss Possible

Cause

The transmitter's SD card is 90% full.

Recommended actions

Contact customer service.

16.10.58 Severe Phase Severity

Alert

Process Aberration

Cause

The transmitter has detected severe two-phase severity.

Recommended actions

Check your process conditions against the values reported by the device.

16.10.59 Severe Two Phase Flow

Alert

Process Aberration

Cause

The transmitter has detected severe two-phase flow.

Recommended actions

Check your process conditions against the values reported by the device.

16.10.60 Time Not Entered

Alert

Configuration Error

Cause

The system time has not been entered. The system time is required for diagnostic logs.

Recommended actions

Set the system time.

16.10.61 Transmitter Software Update Failed

Cause

The transmitter software update failed.

Recommended actions

1. Reboot or power-cycle the transmitter.
2. Retry the procedure.
3. Contact customer service.

16.10.62 Watchdog Error

Alert

Electronics Failed

Cause

The watchdog timer has expired.

Recommended actions

1. Reboot or power-cycle the transmitter to see if the alert clears.
2. If the alert persists, replace the transmitter.
3. Contact customer support.

16.11 Temperature measurement problems

16.11.1 Temperature reading significantly different from process temperature

Cause

- RTD failure
- Wiring problem
- Incorrect calibration factors

- Line temperature in bypass does not match temperature in main line

Recommended actions

1. For sensors with a junction box, check for moisture in the junction box.
2. Check the sensor coils for electrical shorts. If you find problems, replace the sensor.
3. Ensure that all of the calibration parameters have been entered correctly.
   See the sensor tag or the calibration sheet for your meter.
4. Refer to status alerts (especially RTD failure alerts).
5. Disable external temperature compensation.
6. Verify temperature calibration.
7. Check the wiring between the sensor and the transmitter.

16.11.2 Temperature reading slightly different from process temperature

Cause

- Sensor temperature not yet equalized
- Sensor leaking heat

Recommended actions

1. If the error is within the temperature specification for the sensor, there is no problem. If the temperature measurement is outside the specification, contact customer service.
2. The temperature of the fluid may be changing rapidly. Allow sufficient time for the sensor to equalize with the process fluid.
3. Install thermal installation, up to but not over, the transmitter housing.
4. Check the sensor coils for electrical shorts. If you find problems, replace the sensor.
5. The RTD may not be making good contact with the sensor. The sensor may need to be replaced.

16.11.3 Inaccurate temperature data from external device

Cause

- Wiring problem
- Problem with input configuration
- Problem with external device

Recommended actions

1. Verify the wiring between the transmitter and the external device.
2. Verify that the external device is operating correctly.
3. Verify the configuration of the temperature input.
4. Ensure that both devices are using the same measurement unit.

16.12 Velocity measurement problems

If you are measuring gas, minor inaccuracy in velocity readings is expected. If this is an issue for your application, contact customer support.

16.12.1 Non-zero velocity reading at no-flow conditions/zero offset

Cause

- Misaligned piping (especially in new installations)
- Open or leaking valve
- Incorrect sensor zero

Recommended actions

1. Zero the meter.
2. Check for open or leaking valves or seals.
3. Check for mounting stress on the sensor (for example, the sensor being used to support piping, misaligned piping).
4. Contact customer service.

16.12.2 Erratic non-zero flow rate at no-flow conditions

Cause

- Leaking valve or seal
- Two-phase flow
- Plugged or coated sensor tube
- Incorrect sensor orientation
- Wiring problem
- Vibration in pipeline at rate close to sensor tube frequency
- Damping value too low
- Mounting stress on sensor

Recommended actions

1. Verify that the sensor orientation is appropriate for your application.
   See the installation manual for your sensor.
2. Check the drive gain and the pickoff voltage.
3. If the wiring between the sensor and the transmitter includes a 9-wire segment, verify that the 9-wire cable shields are correctly grounded.
4. Check the wiring between the sensor and the transmitter.
5. For sensors with a junction box, check for moisture in the junction box.
6. Purge the sensor tubes.
7. Check for open or leaking valves or seals.

8. Check for sources of vibration.
9. Verify damping configuration.
10. Verify that the measurement units are configured correctly for your application.
11. Check for two-phase flow.
12. Check for radio frequency interference.
13. Contact customer service.

16.12.3 Erratic non-zero velocity reading when velocity is steady

Cause

- Two-phase flow
- Damping value too low
- Plugged or coated sensor tube
- Output wiring problem
- Problem with receiving device
- Wiring problem

Recommended actions

1. Verify that the sensor orientation is appropriate for your application.
   See the installation manual for your sensor.
2. Check the drive gain and the pickoff voltage.
3. Check for air entrainment, tube fouling, flashing, or tube damage.
4. Purge the sensor tubes.
5. Check for open or leaking valves or seals.
6. Check for sources of vibration.
7. Verify damping configuration.
8. Verify that the measurement units are configured correctly for your application.
9. Check for two-phase flow.
10. Check for radio frequency interference.
11. Contact customer service.

16.12.4 Inaccurate velocity reading

Cause

- Wiring problem
- Inappropriate measurement unit
- Incorrect flow calibration factor
- Incorrect density calibration factors
- Incorrect grounding

- Two-phase flow
- Problem with receiving device
- Incorrect sensor zero

Recommended actions

1. Verify that the measurement units are configured correctly for your application.
2. Zero the meter.
3. Check the grounding of all components.
4. Check for two-phase flow.
5. Verify the receiving device, and the wiring between the transmitter and the receiving device.
6. Replace the core processor or transmitter.

16.13 Check batch total against scale reading

You can determine the accuracy of the batch process by comparing batch total as measured by the transmitter to the batch total as measured by a scale.

Prerequisites

You mut be able to measure the delivered batch, using a highly accurate scale.

Procedure

1. Run a batch in the normal manner, using your current configuration.
2. Record the batch total as measured by the transmitter.
3. Measure the delivered batch on the scale and compare the two measurements.
4. If the transmitter's total does not match the scale reading:
   a) Verify the zero, and perform a zero calibration if the zero verification does not succeed.
   b) Check for two-phase flow.
   c) Reduce the turndown across the sensor.
   d) Set **Mass Flow Cutoff** (if you are batching by mass) or **Volume Flow Cutoff** (if you are batching by volume) to a lower value.
5. If the problem is not resolved:
   a) Decrease the flow rate and repeat the test.
   b) Set the batch target to a higher value and repeat the test.
   c) Perform the test on water.

      If the results match when the process fluid is water, examine your process for sources of inconsistency and instability.
6. If the problem is not resolved, contact customer support.

16.14 Perform a core processor resistance test

This procedure measures the resistance between the core processor terminals in the transmitter junction box. The procedure applies only to 4-wire remote installations and remote core processor with remote transmitter installations.

Note

Although you can perform the same test on the terminals at the core processor, the transmitter junction box is typically easier to access.

Procedure

1. Power down the transmitter.
2. Remove the cover of the junction box on the transmitter to access the core processor terminals.

Figure 16-1: Removing the cover of the junction box

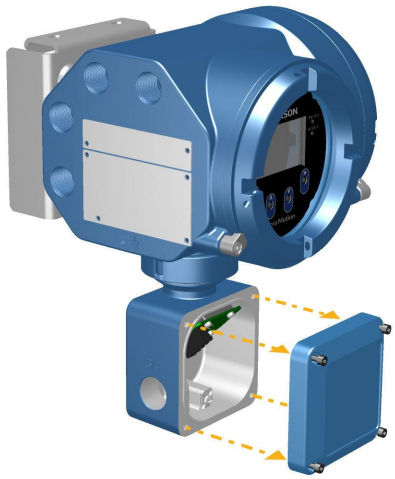

3. Disconnect the 4-wire cable between the transmitter and the sensor.
4. Identify the core processor terminals inside the transmitter junction box.

Figure 16-2: Core processor terminals inside the transmitter junction box

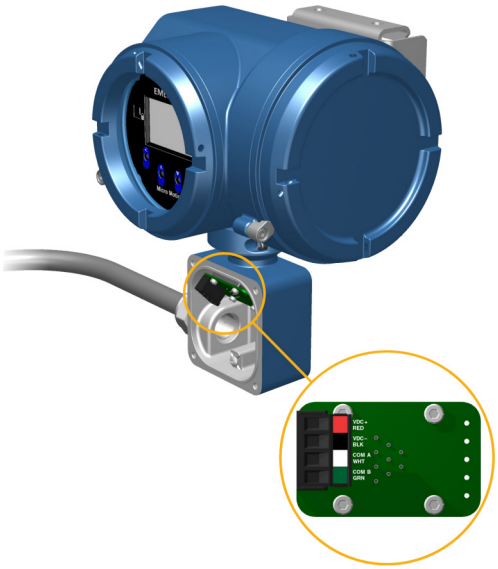

5. For the 700 core processor only, measure the resistance between the terminal pairs listed here.

Terminal pair (transmitter)	Terminal pair (core processor)	Function	Expected resistance
White – green	3–4	RS-485/A and RS-485/B	29 kΩ to 33 kΩ
Black – white	2–3	VDC– and RS-485/A	29 kΩ to 33 kΩ
Black – green	2–4	VDC– and RS-485/B	16 kΩ to 18 kΩ

6. If any resistance measurements are lower than specified, contact customer service.
7. If the resistance measurements fall within the expected ranges, return the transmitter to normal operation and check the wiring between the transmitter and the core processor. If that does not resolve the problem, contact customer service.

Postrequisites

To return to normal operation:

1. Reconnect the 4-wire cable from the sensor to the core processor terminals.
2. Replace the junction box cover.
3. Restore power to the transmitter.

16.15 Check the cutoffs

If the transmitter cutoffs are configured incorrectly, the transmitter may report zero flow when flow is present, or very small amounts of flow under no-flow conditions.

There are separate cutoff parameters for mass flow rate, volume flow rate, gas standard volume flow rate (if applicable), and density. There is an independent cutoff for the mA Output on your transmitter. The interaction between cutoffs sometimes produces unexpected results.

Procedure

Verify the configuration of all cutoffs.

16.16 Check the direction parameters

If the direction parameters are set incorrectly, flow rate may be reported as reverse when it is actually forward, or vice versa. Totalizers and inventories may increment when they should decrement, or vice versa.

The reported flow rate and flow totals depend on the interaction of four factors: the flow direction arrow on the sensor, actual flow direction, the **Sensor Flow Direction Arrow** parameter, the **Direction** parameter for the mA output or the frequency output, and the **Totalizer Direction** parameter.

Procedure

1. Ensure that **Sensor Flow Direction Arrow** is set correctly for your sensor installation and your process.
2. Verify the configuration of **mA Output Direction**, **Frequency Output Direction**, and **Totalizer Direction**.

16.17 Check the drive gain

Excessive or erratic drive gain may indicate any of a variety of process conditions or sensor problems.

To know whether your drive gain is excessive or erratic, you must collect drive gain data during the problem condition and compare it to drive gain data from a period of normal operation.

Excessive (saturated) drive gain

Table 16-2: Possible causes and recommended actions for excessive (saturated) drive gain

Possible cause	Recommended actions
Bent sensor tube	Check the pickoff voltages (see Check the pickoff voltage). If either of them are close to zero (but neither is zero), the sensor tubes may be bent. The sensor will need to be replaced.
Cracked sensor tube	Replace the sensor.
Core processor or module failure	Contact customer support.
Flow rate out of range	Ensure that the flow rate is within sensor limits.
Open drive or pickoff sensor coil	Contact customer support.
Over-pressurized tubes	Contact customer support.

Table 16-2: Possible causes and recommended actions for excessive (saturated) drive gain *(continued)*

Possible cause	Recommended actions
Plugged sensor tube	A dull, audible hum, and unusually high sensor vibration is usually accompanied by high, even saturated, drive gain. Check the pickoff voltages (see Check the pickoff voltage). If either of them are close to zero (but neither is zero), plugged tubes may be the source of your problem. Purge the tubes. In extreme cases, you may need to replace the sensor.
Sensor case full of process fluid	Replace the sensor.
Sensor imbalance	Contact customer support.
Sensor tubes not completely full	Correct process conditions so that the sensor tubes are full.
Two-phase flow	Check for two-phase flow. See Check for two-phase flow (slug flow).
Vibrating element not free to vibrate	Ensure that the vibrating element is free to vibrate.

Erratic drive gain

Table 16-3: Possible causes and recommended actions for erratic drive gain

Possible cause	Recommended actions
Foreign material caught in sensor tubes	• Purge the sensor tubes. • Replace the sensor.

16.18 Check for internal electrical problems

Shorts between sensor terminals or between the sensor terminals and the sensor case can cause the sensor to stop working.

Possible cause	Recommended action
Moisture inside the sensor junction box	Ensure that the junction box is dry and no corrosion is present.
Liquid or moisture inside the sensor case	Contact customer support.
Internally shorted feedthrough	Contact customer support.
Faulty cable	Replace the cable.
Improper wire termination	Verify wire terminations inside the sensor junction box. See *Micro Motion 9-Wire Flow Meter Cable Preparation and Installation Guide*.
Shorts to the housing created by trapped or damaged wires	Contact customer support.
Loose wires or connectors	Contact customer support.
Liquid or moisture inside the housing	Contact customer support.

16.19 Check Frequency Output Fault Action

The **Frequency Output Fault Action** controls the behavior of the Frequency Output if the transmitter encounters an internal fault condition. If the Frequency Output is reporting a constant value, the transmitter may be in a fault condition.

Procedure

1. Check the status alerts for active fault conditions.
2. If there are active fault conditions, the transmitter is performing correctly. If you want to change its behavior, consider the following options:
   - Change the setting of **Frequency Output Fault Action**.
   - For the relevant status alerts, change the setting of **Alert Severity**.
   - Configure the transmitter to ignore the relevant status alerts.

   Restriction
   Some status alerts and conditions are not configurable.

3. If there are no active fault conditions, continue troubleshooting.

16.20 Check Frequency Output Mode

If the transmitter is configured for two Frequency Outputs, and **Frequency Output Mode** is not configured correctly for your application, the Frequency Outputs may exhibit unexpected behavior.

Frequency Output Mode is used only to define the relationship between two Frequency Outputs. If your transmitter is not configured for two Frequency Outputs, **Frequency Output Mode** is not causing your output problem.

Procedure

Verify the configuration of **Frequency Output Mode**.

16.21 Check the scaling of the Frequency Output

If the process variable assigned to the Frequency Output goes to a value that would set the Frequency Output to a signal below 0 Hz or above 12500 Hz, the meter will post an Output Saturated alert for the affected output, then perform the configured fault action.

Procedure

1. Record your current process conditions.
2. Adjust the scaling of the Frequency Output.

16.22 Check grounding

A sensor and the transmitter must be grounded. If the core processor is installed as part of the transmitter or the sensor, it is grounded automatically. If the core processor is installed separately, it must be grounded separately.

Prerequisites

You will need an:

- Installation manual for your sensor
- Installation manual for your transmitter (remote-mount installations only)

Procedure

Refer to the sensor and transmitter installation manuals for grounding requirements and instructions.

16.23 Check HART burst mode

HART burst mode is normally disabled, and should be enabled only if a HART Triloop is being used.

Procedure

1. Check to see if burst mode is enabled or disabled.
2. If burst mode is enabled, disable it.

16.24 Check HART communications

If you cannot establish or maintain HART communications, or if the primary mA Output is producing a fixed value, you may have a wiring problem or a HART configuration problem.

Prerequisites

You may need one or more of the following:

- The installation manual for your transmitter
- A field communicator
- A voltmeter
- Optional: The *HART Application Guide*, available at www.hartcomm.org

Procedure

1. Verify the HART address.

   Tip
   The default HART address is 0. This is the recommended value unless the device is in a multidrop network.

2. If the primary mA Output is producing a fixed value of 4 mA, ensure that **mA Output Action** (**Loop Current Mode**) is enabled.

   For all HART addresses except 0, **mA Output Action** must be enabled to allow the primary mA Output to report process data.

3. Refer to the wiring diagrams in the installation manual and verify that the primary mA Output is correctly wired for HART support.
4. Ensure that the output is powered.
5. Check for electrical problems at the transmitter terminals.
   a) Disconnect the primary mA Output wires from the transmitter's MAO1 terminals.
   b) Wire and power the MAO1 terminals as shown in the following figure.

Figure 16-3: Wiring and power to test terminals

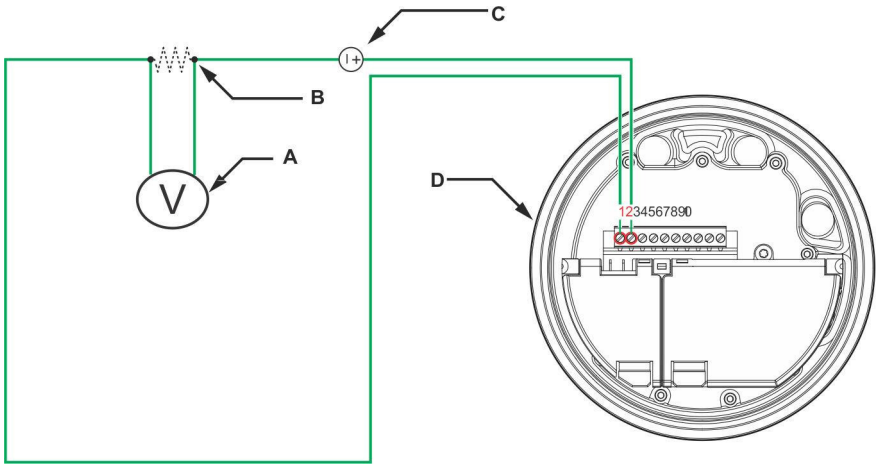

A. Voltmeter
B. 250–600 Ω resistance
C. External power supply
D. Transmitter with end-cap removed

   c) Using a voltmeter, check the voltage drop across the resistor.

      For a 250 Ω resistor, 4–20 mA = 1–5 VDC. If the voltage drop is less than 1 VDC, add resistance to achieve a voltage drop within the required range.

   d) Connect a field communicator directly across the resistor and attempt to communicate (poll).

      If this test fails, the transmitter may need service. Contact customer service.

16.25 Locate a device using the HART 7 Squawk feature

The Squawk feature causes the device to show a specific pattern on its display. You can use this to locate or identify a device.

Restriction

The Squawk feature is available only with HART 7 connections from a field communicator. It is not available with ProLink III.

Procedure

1. Choose **Service Tools** → **Maintenance** → **Routine Maintenance**.

2. Choose **Locate Device**.

An 0-0-0-0 pattern is shown on the display.

To return to the normal display, activate any button on the device display, or wait 60 seconds.

16.26 Perform loop tests

A loop test is a way to verify that the transmitter and the remote device are communicating properly. A loop test also helps you know whether you need to trim mA Outputs.

Prerequisites

- Before performing a loop test, configure the channels for the transmitter outputs that will be used in your application.
- Follow appropriate procedures to ensure that loop testing will not interfere with existing measurement and control loops.

16.26.1 Perform loop tests using the display

Procedure

1. Test the mA Output(s).
   a) Choose **Menu** → **Service Tools** → **Output Simulation** and select the mA Output to test.
   b) Set **Simulation Value** to `4`.
   c) Start the simulation.
   d) Read the mA current at the receiving device and compare it to the transmitter output.

      The readings do not need to match exactly. If the values are slightly different, you can correct the discrepancy by trimming the output.

   e) Choose **New Value**.
   f) Set **Simulation Value** to `20`.
   g) Start the simulation.
   h) Read the mA current at the receiving device and compare it to the transmitter output.

      The readings do not need to match exactly. If the values are slightly different, you can correct the discrepancy by trimming the output.

   i) Choose **Exit**.
2. Test the Frequency Output(s).
   a) Choose **Menu** → **Service Tools** → **Output Simulation** and select the Frequency Output to test.
   b) Set **Simulation Value** to `1`.
   c) Start the simulation.
   d) Read the frequency signal at the receiving device and compare it to the transmitter output.

e) Choose **New Value**.

f) Set **Simulation Value** to `14500`.

g) Start the simulation.

h) Read the frequency signal at the receiving device and compare it to the transmitter output.

i) Choose **Exit**.

3. Test the Discrete Output(s).
   a) Choose **Menu** → **Service Tools** → **Output Simulation** and select the discrete output to test.
   b) Set **Simulation Value** to ON.
   c) Start the simulation.
   d) Verify the signal at the receiving device.
   e) Choose **New Value**.
   f) Set **Simulation Value** to OFF.
   g) Start the simulation.
   h) Verify the signal at the receiving device.
   i) Choose **Exit**.

Postrequisites

- If the mA Output readings are within 20 microamps of the expected values, you can correct this discrepancy by trimming the output.
- If the discrepancy between the mA Output readings is greater than 20 microamps, or if at any step the reading was faulty, verify the wiring between the transmitter and the remote device, and try again.
- If the Discrete Output readings are reversed, check the setting of **Discrete Output Polarity**.

16.26.2 Check Lower Range Value and Upper Range Value

If the process variable assigned to the mA Output falls below the configured **Lower Range Value** (LRV) or rises above the configured **Upper Range Value** (URV), the meter will post an Output Saturated alert for the affected output, then perform the configured fault action.

Procedure

1. Record your current process conditions.
2. Check the configuration of the LRV and URV.

16.26.3 Perform loop tests using ProLink III

Procedure

1. Test the mA Output(s).
   a) Choose **Device Tools** → **Diagnostics** → **Testing** and select the mA output to test.

b) Enter `4` in **Fix to:**.

c) Select **Fix mA**.

d) Read the mA current at the receiving device and compare it to the transmitter output.

The readings do not need to match exactly. If the values are slightly different, you can correct the discrepancy by trimming the output.

e) Select **UnFix mA**.

f) Enter `20` in **Fix to:**.

g) Select **Fix mA**.

h) Read the mA current at the receiving device and compare it to the transmitter output.

The readings do not need to match exactly. If the values are slightly different, you can correct the discrepancy by trimming the output.

i) Select **UnFix mA**.

2. Test the Frequency Output(s).
   a) Choose **Device Tools** → **Diagnostics** → **Testing** and select the frequency output to test.
   b) Enter the Frequency Output value in **Fix to**.
   c) Select **Fix FO**.
   d) Read the frequency signal at the receiving device and compare it to the transmitter output.
   e) Select **UnFix FO**.
3. Test the Discrete Output(s).
   a) Choose **Device Tools** → **Diagnostics** → **Testing** → **Discrete Output Test**.
   b) If your transmitter is configured for two Discrete Outputs, determine which Discrete Output you want to test.
   c) Set **Fix to:** to ON.
   d) Verify the signal at the receiving device.
   e) Set **Fix to:** to OFF.
   f) Verify the signal at the receiving device.
   g) Select **UnFix**.

Postrequisites

- If the mA Output readings are within 20 microamps of the expected values, you can correct this discrepancy by trimming the output.
- If the discrepancy between the mA Output readings is greater than 20 microamps, or if at any step the reading was faulty, verify the wiring between the transmitter and the remote device, and try again.
- If the Discrete Output readings are reversed, check the setting of **Discrete Output Polarity**.

16.26.4 Perform loop tests using a field communicator

Procedure

1. Test the mA Output(s).
   a) Choose **Service Tools** → **Simulate** → **Simulate Outputs** and select the mA output to test.
   b) Select **4 mA**.
   c) Read the mA current at the receiving device and compare it to the transmitter output.

      The readings do not need to match exactly. If the values are slightly different, you can correct the discrepancy by trimming the output.

   d) Press **OK**.
   e) Select **20 mA**.
   f) Read the mA current at the receiving device and compare it to the transmitter output.

      The readings do not need to match exactly. If the values are slightly different, you can correct the discrepancy by trimming the output.

   g) Press **OK**.
   h) Choose **End**.
2. Test the Frequency Output(s).
   a) Choose **Service Tools** → **Simulate** → **Simulate Outputs** and select the Frequency Output to test.
   b) Select the Frequency Output level.
   c) Press **OK**.
   d) Choose **End**.
3. Test the Discrete Output(s).
   a) Choose **Service Tools** → **Simulate** → **Simulate Outputs** and select the Discrete Output to test.
   b) Choose **Off**.
   c) Verify the signal at the receiving device.
   d) Press **OK**.
   e) Choose **On**.
   f) Verify the signal at the receiving device.
   g) Press **OK**.
   h) Choose **End**.

Postrequisites

- If the mA Output readings are within 20 microamps of the expected values, you can correct this discrepancy by trimming the output.

- If the discrepancy between the mA Output readings is greater than 20 microamps, or if at any step the reading was faulty, verify the wiring between the transmitter and the remote device, and try again.
- If the Discrete Output readings are reversed, check the setting of **Discrete Output Polarity**.

16.27 Check Lower Range Value and Upper Range Value

If the process variable assigned to the mA Output falls below the configured **Lower Range Value** (LRV) or rises above the configured **Upper Range Value** (URV), the meter will post an Output Saturated alert for the affected output, then perform the configured fault action.

Procedure

1. Record your current process conditions.
2. Check the configuration of the LRV and URV.

16.28 Check mA Output Fault Action

The **mA Output Fault Action** controls the behavior of the mA Output if the transmitter encounters an internal fault condition. If the mA Output is reporting a constant value below 4 mA or above 20 mA, the transmitter may be in a fault condition.

Procedure

1. Check the status alerts for active fault conditions.
2. If there are active fault conditions, the transmitter is performing correctly. If you want to change its behavior, consider the following options:
   - Change the setting of **mA Output Fault Action**.
   - For the relevant status alerts, change the setting of **Alert Severity**.
   - Configure the transmitter to ignore the relevant status alerts or conditions.

   Restriction
   Some status alerts and conditions are not configurable.

3. If there are no active fault conditions, continue troubleshooting.

16.29 Trim mA Output

Trimming an mA Output calibrates the transmitter's mA Output to the receiving device. If the current trim value is inaccurate, the transmitter will under-compensate or over-compensate the output.

16.29.1 Trim an mA Output using the display

Trimming the mA Output establishes a common measurement range between the transmitter and the device that receives the mA Output.

Prerequisites

Ensure that the mA Output is wired to the receiving device that will be used in production.

Procedure

1. Choose **Menu** → **Service Tools** → **mA Output Trim** and select the output to trim.
2. Follow the instructions in the guided method.
3. Check the trim results. If any trim result is less than −20 microamps or greater than +20 microamps, contact customer service.

16.29.2 Trim mA Output using ProLink III

Trimming the mA Output establishes a common measurement range between the transmitter and the device that receives the mA Output.

Prerequisites

Ensure that the mA Output is wired to the receiving device that will be used in production.

Procedure

1. Follow the instructions in the guided method.
2. Check the trim results. If any trim result is less than −20 microamps or greater than +20 microamps, contact customer service.

16.29.3 Trim mA Outputs using a field communicator

Trimming the mA Output establishes a common measurement range between the transmitter and the device that receives the mA Output.

Prerequisites

Ensure that the mA Output is wired to the receiving device that will be used in production.

Procedure

1. Follow the instructions in the guided method.
2. Check the trim results. If any trim result is less than −20 microamps or greater than +20 microamps, contact customer service.

16.30 Check the pickoff voltage

If the pickoff voltage readings are unusually low, you may have any of a variety of process or equipment problems.

To know whether your pickoff voltage is unusually low, you must collect pickoff voltage data during the problem condition and compare it to pickoff voltage data from a period of normal operation.

Drive gain and pickoff voltage are inversely proportional. As drive gain increases, pickoff voltages decrease and vice versa.

Table 16-4: Possible causes and recommended actions for low pickoff voltage

Possible cause	Recommended actions
Faulty wiring runs between the sensor and transmitter	Verify wiring between sensor and transmitter.

Table 16-4: Possible causes and recommended actions for low pickoff voltage *(continued)*

Possible cause	Recommended actions
Process flow rate beyond the limits of the sensor	Verify that the process flow rate is not out of range of the sensor.
Sensor tubes are not vibrating	• Check for plugging or deposition. • Ensure that the vibrating element is free to vibrate (no mechanical binding). • Verify wiring.
Moisture in the sensor electronics	Eliminate the moisture in the sensor electronics.
The sensor is damaged, or sensor magnets may have become demagnetized	Replace the sensor.

16.31 Check power supply wiring

If the power supply wiring is damaged or improperly connected, the transmitter may not receive enough power to operate properly.

Prerequisites

- You will need the installation manual for your transmitter.
- When using DC power, a minimum of 1.5 amps of startup current is required.

Procedure

1. Use a voltmeter to test the voltage at the transmitter's power supply terminals.
   - If the voltage is within the specified range, you do not have a power supply problem.
   - If the voltage is low, ensure that the power supply is adequate at the source, the power cable is sized correctly, there is no damage to the power cable, and an appropriate fuse is installed.
   - If there is no power, continue with this procedure.
2. **WARNING**
   If the transmitter is in a hazardous area, wait five minutes after disconnecting the power. Failure to do so could result in an explosion causing death or injury.

   Before inspecting the power supply wiring, disconnect the power source.
3. Ensure that the terminals, wires, and wiring compartment are clean and dry.
4. Ensure that the power supply wires are connected to the correct terminals.
5. Ensure that the power supply wires are making good contact, and are not clamped to the wire insulation.
6. **WARNING**
   If the transmitter is in a hazardous area, do not reapply power to the transmitter with the housing cover removed. Reapplying power to the transmitter while the housing cover is removed could cause an explosion.

   Reapply power to the transmitter.

7. Test the voltage at the terminals.
   If there is no power, contact customer service.

16.32 Check for radio frequency interference (RFI)

The transmitter's Frequency Output or Discrete Output can be affected by radio frequency interference (RFI). Possible sources of RFI include a source of radio emissions, or a large transformer, pump, or motor that can generate a strong electromagnetic field. Several methods to reduce RFI are available. Use one or more of the following suggestions, as appropriate to your installation.

Procedure

- Use shielded cable between the output and the receiving device.
  - Terminate the shielding at the receiving device. If this is impossible, terminate the shielding at the cable gland or conduit fitting.
  - Do not terminate the shielding inside the wiring compartment.
  - 360-degree termination of shielding is unnecessary.
- Eliminate the RFI source.
- Move the transmitter.

16.33 Check the sensor coils

Checking the sensor coils can identify a cause for a no sensor response alert.

Restriction

This procedure applies only to 9-wire remote-mount transmitters and remote transmitters with remote core processors. For integral mount transmitters, consult the factory.

Procedure

1. Disconnect power to the transmitter.

   WARNING
   If the transmitter is in a hazardous area, wait five minutes after disconnecting the power. Failure to do so could result in an explosion causing death or injury.

2. Unplug the terminal blocks from the terminal board on the core processor.
3. Remove the wires from the sensor junction box.
4. Using a digital multimeter (DMM), check the pickoff coils by placing the DMM leads on the unplugged terminal blocks for each terminal pair. See Table 16-5 for a list of the coils. Record the values.

   Table 16-5: Coils and test terminal pairs

Coil	Sensor model	Terminal colors
Drive coil	All	Brown to red
Left pickoff coil (LPO)	All	Green to white
Right pickoff coil (RPO)	All	Blue to gray

Table 16-5: Coils and test terminal pairs *(continued)*

Coil	Sensor model	Terminal colors
Resistance temperature detector (RTD)	All	Yellow to violet
Lead length compensator (LLC)	All except T-Series and CMF400 (see note)	Yellow to orange
Composite RTD	CMFS025-150 and T-Series	Yellow to orange
Fixed resistor (see note)	CMFS007, CMFS010, CMFS015, CMF400, and F300	Yellow to orange

Note
The CMF400 fixed resistor applies only to certain specific CMF400 releases. Contact customer support for more information.

There should be no open circuits, that is, no infinite resistance readings. The left pickoff and right pickoff readings should be the same or very close (±5 Ω). If there are any unusual readings, repeat the coil resistance tests at the sensor junction box to eliminate the possibility of faulty cable. The readings for each coil pair should match at both ends.

5. Test the terminals in the sensor junction box for shorts to case.
   a) Leave the terminal blocks disconnected.
   b) Remove the lid of the junction box.
   c) Testing one terminal at a time, place a DMM lead on the terminal and the other lead on the sensor case.

      With the DMM set to its highest range, there should be infinite resistance on each lead. If there is any resistance at all, there is a short to case.

6. Test the resistance of junction box terminal pairs.
   a) Test the brown terminal against all other terminals except the red one.
   b) Test the red terminal against all other terminals except the brown one.
   c) Test the green terminal against all other terminals except the white one.
   d) Test the white terminal against all other terminals except the green one.
   e) Test the blue terminal against all other terminals except the gray one.
   f) Test the gray terminal against all other terminals except the blue one.
   g) Test the orange terminal against all other terminals except the yellow and violet ones.
   h) Test the yellow terminal against all other terminals except the orange and violet ones.
   i) Test the violet terminal against all other terminals except the yellow and orange ones.

   There should be infinite resistance for each pair. If there is any resistance at all, there is a short between terminals.

Postrequisites

To return to normal operation:

1. Plug the terminal blocks into the terminal board.
2. Replace the lid on the sensor junction box.

Important
When reassembling the meter components, be sure to grease all O-rings.

16.34 Using sensor simulation for troubleshooting

When sensor simulation is enabled, the transmitter reports user-specified values for basic process variables. This allows you to reproduce various process conditions or to test the system.

You can use sensor simulation to help distinguish between legitimate process noise and externally caused variation. For example, consider a receiving device that reports an unexpectedly erratic density value. If sensor simulation is enabled and the observed density value does not match the simulated value, the source of the problem is likely to be somewhere between the transmitter and the receiving device.

Sensor simulation requires an enhanced core and a communication device.

Important
When sensor simulation is active, the simulated value is used in all transmitter outputs and calculations, including totals and inventories, volume flow calculations, and concentration calculations. Disable all automatic functions related to the transmitter outputs and place the loop in manual operation. Do not enable simulation mode unless your application can tolerate these effects, and be sure to disable simulation mode when you have finished testing.

16.35 Check sensor-to-transmitter wiring

A number of power-supply and output problems may occur if the wiring between the sensor and the transmitter is improperly connected, or if the wiring becomes damaged.

Be sure to check all wiring segments:

- If you have a 4-wire transmitter, check the wiring between the transmitter and the core processor.
- If you have a 9-wire transmitter, check the wiring between the transmitter and the sensor junction box.
- If you have a remote transmitter with remote core processor, check the wiring between the transmitter and the core processor and the wiring between the core processor and the sensor junction box.

Prerequisites

You will need the installation manual for your transmitter.

Procedure

1. Before opening the wiring compartments, disconnect the power source.

   WARNING
   If the transmitter is in a hazardous area, wait five minutes after disconnecting the power. Failure to do so could result in an explosion causing death or injury.

2. Verify that the transmitter is connected to the sensor according to the information provided in the installation manual.
3. Verify that the wires are making good contact with the terminals.

4. Check the continuity of all wires from the transmitter to the sensor.

16.36 Check for two-phase flow (slug flow)

Two-phase flow can cause rapid changes in the drive gain. This can cause a variety of measurement issues.

Procedure

1. Check for two-phase flow alerts (e.g., A105).
   If the transmitter is not generating two-phase flow alerts, verify that two-phase flow limits have been set. If limits are set, two-phase flow is not the source of your problem.
2. Check the process for cavitation, flashing, or leaks.
3. Monitor the density of your process fluid output under normal process conditions.
4. Check the settings of **Two-Phase Flow Low Limit**, **Two-Phase Flow High Limit**, and **Two-Phase Flow Timeout**.

   Tip
   You can reduce the occurrence of two-phase flow alerts by setting **Two-Phase Flow Low Limit** to a lower value, **Two-Phase Flow High Limit** to a higher value, or **Two-Phase Flow Timeout** to a higher value.

A Using the transmitter display

This section explains how to use the 5700 display. Using the display, you can move through the menus, configure the application, monitor and control the application, and perform maintenance and diagnostic tasks.

A.1 Components of the transmitter display

The transmitter display includes a status LED, a multi-line LCD panel, two security switches, and four optical switches.

Figure A-1: 5700 transmitter display

Status LED

The status LED indicates the current state of the transmitter.

Figure A-2: 5700 transmitter status LED

Table A-1: Status LED and device status

Status LED condition	Device status
Solid green	No alerts are active.
Solid yellow	One or more alerts are active with **Alert Severity** = Out of Specification, Maintenance Required, or Function Check.
Solid red	One or more alerts are active with **Alert Severity** = Failure.
Flashing yellow (1 Hz)	The `Function Check in Progress` alert is active.

LCD panel

In normal operation, the LCD panel shows the current value of the display variables, and their measurement units.

Figure A-3: 5700 transmitter LCD panel

The LCD panel also provides access to the display menus and alert information. From the display menus, you can:

- View the current configuration and make configuration changes.
- Perform procedures such as loop testing and zero verification.
- Run batches.

The alert information allows you to see which alerts are active, acknowledge the alerts individually or as a group, and to see more detailed information for individual alerts.

A.2 Access and use the display menus

The display menus allow you to perform most configuration, administration, and maintenance tasks.

The four optical switches, ⇦⇧⇩⇨, are used to navigate the menus, make selections, and enter data. To activate an optical switch, hold your thumb or finger over it to block the light.

Figure A-4: Optical switches

Procedure

1. Observe the action bar at the bottom of the LCD panel.

   The action bar displays **Menu⇨**.

2. Place your thumb or finger over the ⇨ optical switch to activate it.

   The top-level menu is displayed.

3. Navigate the menus using the four optical switches:
   - Activate ⇧ or ⇩ to scroll to the previous or next item in the menu.
   - Activate and hold ⇧ or ⇩ (approximately 1 second to scroll rapidly through numbers or menu options, or to move to the previous screen or next screen in a multi-screen display.
   - Activate ⇨ to drill down to a lower menu or to select an option.
   - Activate and hold ⇨ to save and apply your action.
   - Activate ⇦ to return to the previous menu.
   - Activate and hold ⇦ to cancel your action.

   The action bar is updated with context-sensitive information. The ⇨ and ⇦ symbols indicate the associated optical switch.

   If the menu or the topic is too large for a single display screen, the ⇩ and ⇧ symbols at the bottom and top of the LCD panel are used to indicate that you must scroll down or up to see more information.

Figure A-5: Navigation arrows

4. If you make a menu choice that leads to a possible configuration change, or to certain procedures such as zero calibration:
   - If display security is not enabled, the display prompts you to activate ⇦⇧⇩⇨, in that order. This feature protects against accidental changes to configuration, but does not provide any security.

Figure A-6: Security prompts

   - If display security is enabled, the display prompts you to enter the display password.

5. If you make a menu choice that requires entering a numeric value or character string, the display provides a screen similar to the following:

Figure A-7: Numeric values and character strings

   - Activate ⇦ or ⇨ to position the cursor.
   - Activate ⇧ and ⇩ to scroll through the values that are valid for that position.
   - Repeat until all characters are set.
   - Activate and hold ⇨ to save the value.

6. To exit the display menu system, use either of the following methods:
   - Wait until the menu times out and returns to the display variables.
   - Exit each menu separately, working your way back to the top of the menu system.

B Using ProLink III with the transmitter

B.1 Basic information about ProLink III

ProLink III is a configuration and service tool available from Micro Motion. ProLink III runs on a Windows platform and provides complete access to transmitter functions and data.

Version requirements

Use the latest version of ProLink III and the device firmware to support all features. For details about ProLink III device support, refer to the `ProLink III ChangeLog.txt` file.

ProLink III requirements

To install ProLink III, you must have:

- The ProLink III installation media
- The ProLink III installation kit for your connection type:
  - Converter: RS-232 to Bell 202, or USB A-type to Bell 202
  - USB A-type to A-type cable: Service port connection

To obtain ProLink III and the appropriate installation kit, contact customer support.

ProLink III documentation

Most of the instructions in this manual assume that you are already familiar with ProLink III or that you have a general familiarity with Windows programs. If you need more information than this manual provides, see the *Micro Motion ProLink III with ProcessViz Software User Manual*.

In most ProLink III installations, the manual is installed with the ProLink III program. Additionally, the ProLink III manual is available on the documentation CD or at www.emerson.com.

ProLink III features and functions

ProLink III offers complete transmitter configuration and operation functions. ProLink III also offers a number of additional features and functions, including:

- A Professional version with expanded features not available on the Basic version.
- The ability to save the transmitter configuration set to a file on the PC, and reload it or propagate it to other transmitters
- The ability to log specific types of data to a file on the PC
- The ability to view performance trends for various types of data on the PC
- The ability to connect to and view information for more than one device
- A guided connection wizard

These features are documented in the *Micro Motion ProLink III with ProcessViz Software User Manual*. ProLink III features are not documented in this manual.

ProLink III messages

As you use ProLink III with a Micro Motion transmitter, you will see a number of messages and notes. This manual does not document all of these messages and notes.

Important
The user is responsible for responding to messages and notes and complying with all safety messages.

B.2 Connect with ProLink III

A connection from ProLink III to your transmitter allows you to read process data, configure the transmitter, and perform maintenance and troubleshooting tasks.

B.2.1 Connection types supported by ProLink III

Depending on the channels that are licensed on your transmitter, you may have several connection types available to connect from ProLink III to the transmitter. Choose the connection type appropriate to your network and the tasks you intend to perform.

Table B-1: Connection types supported by ProLink III

Connection type	Port or channel	Terminals
Service port	USB A-type	N/A
HART/Bell 202	Channel A (mA Output 1)	1 and 2

When selecting a connection type, consider the following:

- Some connections require opening the wiring compartment. These connection types should be used only for temporary connections, and may require extra safety precautions.
- Service port connections use standard connection parameters and a standard address already defined in ProLink III.
- HART/Bell 202 connections use standard HART connection parameters that are already defined in ProLink III.

B.2.2 Make a service port connection from ProLink III to the transmitter

WARNING
If the transmitter is in a hazardous area, do not remove the housing cover while the transmitter is powered up. Failure to follow these instructions can cause an explosion resulting in injury or death.

Prerequisites

- Ensure the transmitter service port is enabled.
- Obtain a USB type A to type A cable.

  Important
  The USB cable should be no greater than 1 meter in length.

Procedure

1. Insert one end of the USB cable into the USB port on your PC.
2. Open the wiring compartment on the transmitter, and insert the other end of the USB cable into the service port on the transmitter.

Figure B-1: Service port inside transmitter wiring compartment

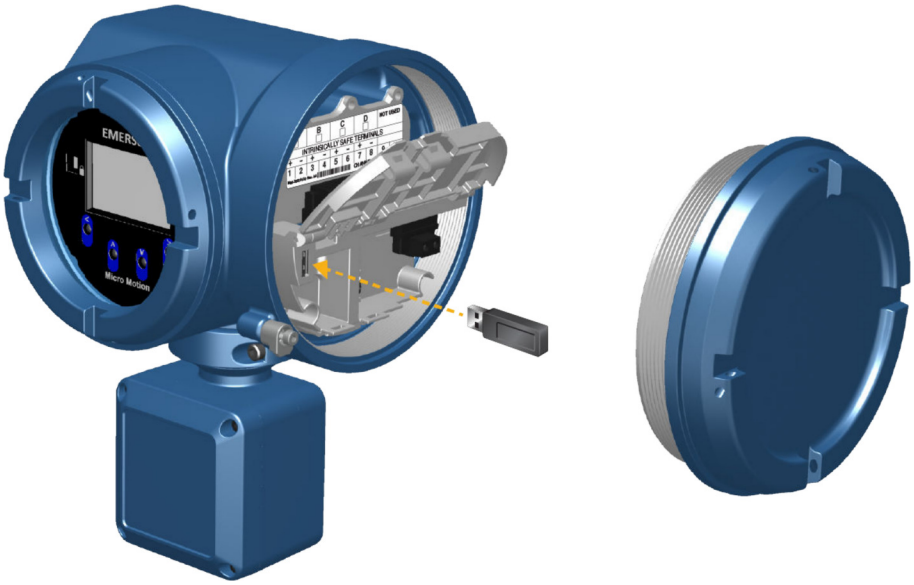

3. Start ProLink III.
4. Choose **Connect to Physical Device**.
5. Set parameters as shown here.

Parameter	Setting
Protocol	Service Port
PC Port	The number assigned to the USB port on your PC

6. Click **Connect**.

Need help?

If an error message appears:

- Ensure that you have specified the correct port on your PC.

- Ensure the transmitter service port is enabled at **Menu** → **Configuration** → **Security** → **Service Port**

B.2.3 Make a HART/Bell 202 connection from ProLink III to the transmitter

This connection type uses HART protocol and commands to communicate with the transmitter over a Bell 202 physical layer. You can connect directly to the Channel A terminals on the transmitter, to any point in a local HART loop, or to any point in a HART multidrop network.

Prerequisites

- Channel A activated on the transmitter
- Installation kit

Procedure

1. Attach the signal converter to the serial port or USB port on your PC.
2. To connect directly to the transmitter terminals:
   a) **WARNING**
   If the transmitter is in a hazardous area, do not remove the housing cover while the transmitter is powered up. Failure to follow these instructions can cause an explosion resulting in injury or death.

   Open the transmitter wiring compartment.

   b) Connect the leads from the signal converter to terminals 1 and 2 on the transmitter, or to the HART connection posts.

   Tip
   HART connections are not polarity-sensitive. It does not matter which lead you attach to which terminal.

   c) Add resistance as necessary to achieve at least one volt across the connection points.

   Important
   HART/Bell 202 connections require a voltage drop of 1 VDC. To achieve this, add resistance of 250–600 Ω to the connection.

Figure B-2: Connection to mA Output terminals

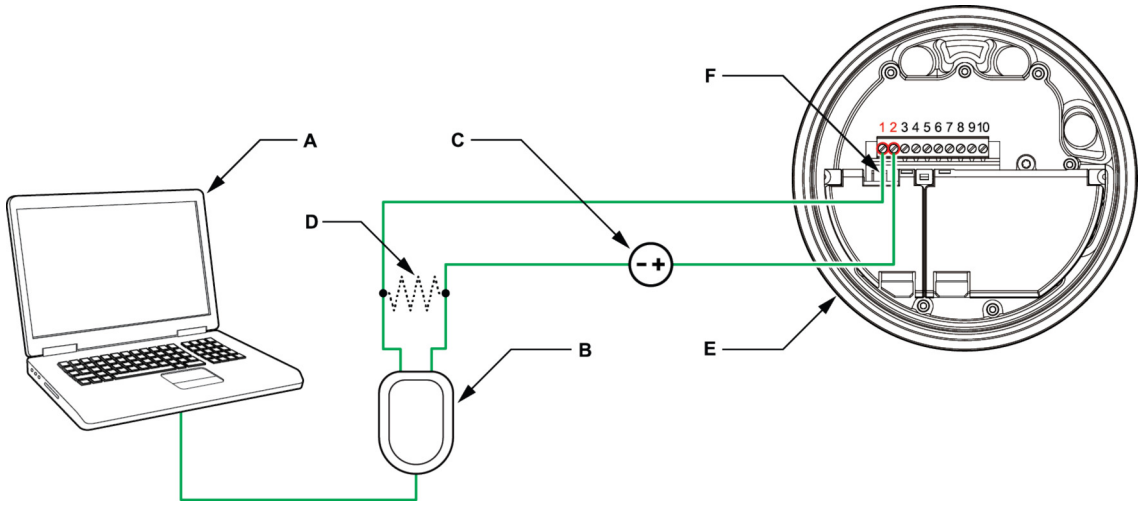

A. PC
B. RS-232 to Bell 202 converterBell 202 converter
C. External power supply, if required
D. 250–600 Ω resistance
E. Transmitter with end-cap removed
F. HART connection posts

The signal converter must be connected across a resistance of 250–600 Ω. The mA output requires an external power supply with a minimum of 250 Ω and 8 V. See the following figure to help determine the appropriate combination of voltage and resistance. Note that many PLCs have a built-in 250-Ω resistor. If the PLC is powering the circuit, be sure to take this into consideration.

Figure B-3: Channel A mA/HART supply voltage and loop resistance

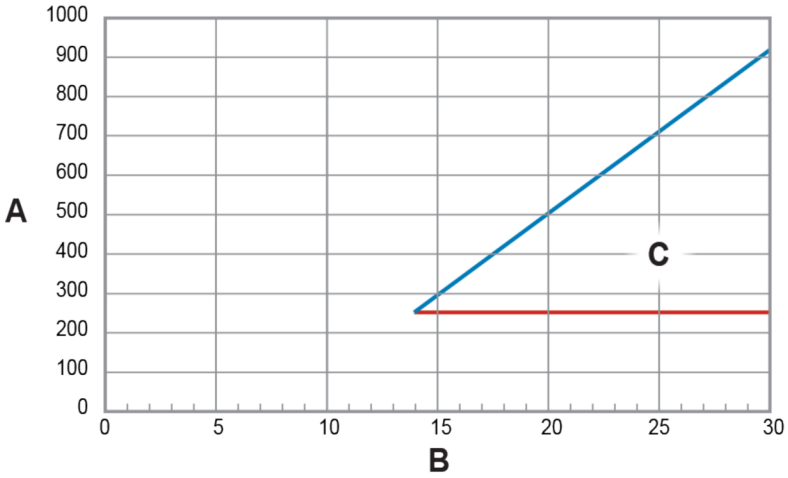

A. Total loop resistance R_{max} (including barrier)
B. Supply voltage VDC (volts)
C. Operating region with HART

Note

Rmax = (Vsupply - 8) / 0.024
For HART Rmin = 250 Ω
mA Output is linear with process from 3.8 to 20.5 mA, per NAMUR NE-43 (February 2003)

3. To connect to a point in the local HART loop:
   a) Attach the leads from the signal converter to any point in the loop, ensuring that the leads are across the resistor.
   b) Add resistance as necessary to achieve at least one volt across the connection points.

   Important
   HART/Bell 202 connections require a voltage drop of 1 VDC. To achieve this, add resistance of 250–600 Ω to the connection.

Figure B-4: Connection over local loop

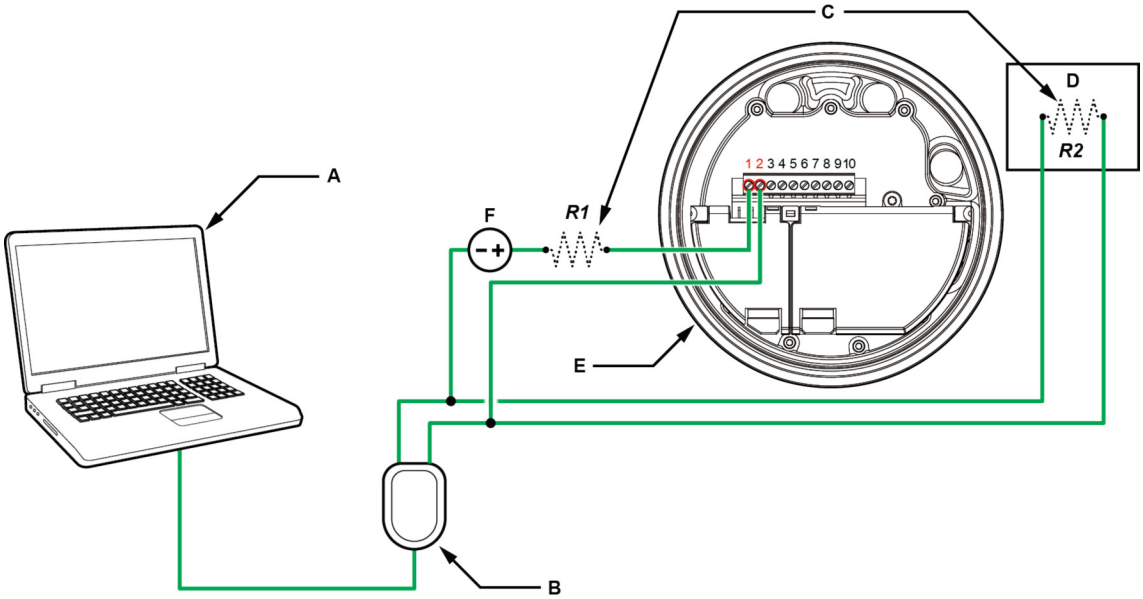

A. PC
B. Bell 202 converter
C. Any combination of resistors R1 and R2 as necessary to meet HART communication resistance requirements
D. DCS or PLC
E. Transmitter with end-cap removed
F. External power supply, if required

Note
This figure shows a serial port connection. USB connections are also supported.

The signal converter must be connected across a resistance of 250–600 Ω. The mA output requires an external power supply with a minimum of 250 Ω and 8 V. See the following figure to help determine the appropriate combination of voltage and resistance. To meet the resistance requirements, you may

use any combination of resistors R1 and R2. Note that many PLCs have a built-in 250-Ω resistor. If the PLC is powering the circuit, be sure to take this into consideration.

Figure B-5: Channel A mA/HART supply voltage and loop resistance

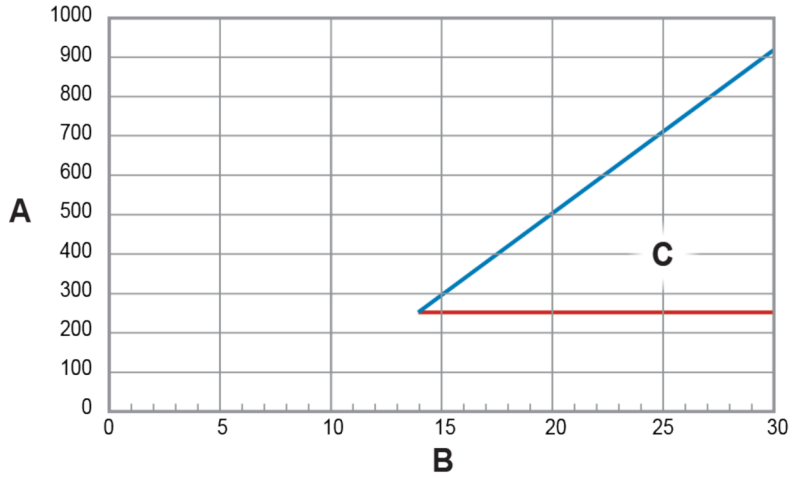

A. Total loop resistance R_{max} (including barrier)
B. Supply voltage VDC (volts)
C. Operating region with HART

Note

Rmax = (Vsupply - 8) / 0.024
For HART Rmin = 250 Ω
mA Output is linear with process from 3.8 to 20.5 mA, per NAMUR NE-43 (February 2003)

4. To connect over a HART multidrop network:
   a) Attach the leads from the signal converter to any point on the network.
   b) Add resistance as necessary to achieve at least one volt across the connection points.

Important
HART/Bell 202 connections require a voltage drop of 1 VDC. To achieve this, add resistance of 250–600 Ω to the connection.

Figure B-6: Connection over multidrop network

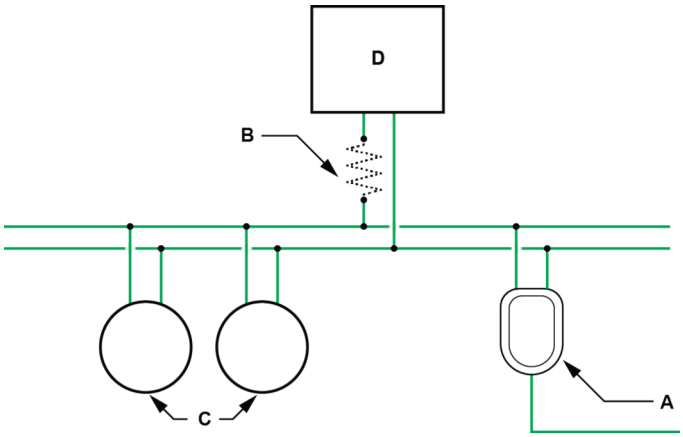

A. *RS-232 to Bell 202 converter*
B. *250–600 Ω resistance*
C. *Devices on the network*
D. *Master device*

5. Start ProLink III.
6. Choose **Connect to Physical Device**.
7. Set **Protocol** to HART Bell 202.

Tip
HART/Bell 202 connections use standard connection parameters. You do not need to configure them here.

8. If you are using a USB signal converter, enable **Toggle RTS**.
9. Set **Address/Tag** to the HART polling address configured in the transmitter.

Tip
- If this is the first time you are connecting to the transmitter, use the default address: 0.
- If you are not in a HART multidrop environment, the HART polling address is typically left at the default value.
- If you are unsure of the transmitter's address, click **Poll**. The program will search the network and return a list of the transmitters that it detects.

10. Set the **PC Port** value to the PC COM port that you are using for this connection.
11. Set **Master** as appropriate.

Option	Description
Secondary	Use this setting if a primary HART host such as a DCS is on the network.
Primary	Use this setting if no other primary host is on the network. A field communicator is a secondary host.

12. Select **Connect**.

Need help?

If an error message appears:

- Verify the HART address of the transmitter, or poll HART addresses 1–15.
- Ensure that you have specified the correct port on your PC.
- Check the wiring between the PC and the transmitter.
- If the channel is configured for external power, ensure that the mA output is powered.
- Increase or decrease resistance.
- Disable burst mode.
- Ensure that the resistor is installed correctly. If the mA output is internally powered (active), the resistor must be installed in parallel. If the mA output is externally powered (passive), the resistor must be installed in series.
- Ensure that there is no conflict with another HART master. If any other host (DCS or PLC) is connected to the mA output, temporarily disconnect the DCS or PLC wiring.

C Using a field communicator with the transmitter

C.1 Basic information about field communicators

A field communicator is a handheld configuration and management tool that can be used with a variety of devices, including Micro Motion transmitters. It provides complete access to transmitter functions and data.

Field communicator documentation

Most of the instructions in this manual assume that you are already familiar with field communicators and can perform the following tasks:

- Turn on the field communicator
- Navigate the field communicator menus
- Establish communication with HART-compatible devices
- Send configuration data to the device
- Use the alpha keys to enter information

Device descriptions (DDs)

In order for the field communicator to work with your device, the appropriate device description (DD) must be installed. Make sure that the DD version matches the transmitter version.

To view the device descriptions that are installed on your field communicator:

Type of field communicator	Procedure
475 handheld communicator	1. At the HART application menu, press **Utility** → **Available Device Descriptions**. 2. Scroll the list of manufacturers and select **Micro Motion**, then scroll the list of installed device descriptions.
AMS TREX	1. In the field communicator, tap HART Offline on the **Connect** → **Select** screen. 2. Tap **Simulate** → **Device manufacturer** → **Device type**. 3. Select the device revision and the device description revision.

If **Micro Motion** is not listed, or you do not see the required device description, use the field communicator's upgrade utility to install the device description or contact customer support.

Field communicator menus and messages

As you use a field communicator with a Micro Motion transmitter, you will see a number of messages and notes. This manual does not document all of these messages and notes.

Important
The user is responsible for responding to messages and notes and complying with all safety messages.

C.2 Connect with a field communicator

A connection from the field communicator to your transmitter allows you to read process data, configure the transmitter, and perform maintenance and troubleshooting tasks.

Prerequisites

Make sure that the appropriate device description (DD) is installed on the field communicator. The DD version must match the transmitter version.

You can connect a field communicator to the primary mA terminals on the transmitter, to the HART connection posts on the transmitter, to any point in a local HART loop, or to any point in a HART multidrop network.

WARNING
If the transmitter is in a hazardous area, do not remove the housing cover while the transmitter is powered up. Failure to follow these instructions can cause an explosion resulting in injury or death.

Important
If the HART security switch is set to **ON**, HART protocol cannot be used to perform any action that requires writing to the transmitter. For example, you cannot change the configuration, reset totalizers, or perform calibration using a field communicator with a HART connection. When the HART security switch is set to **OFF**, no functions are disabled.

Procedure

1. To connect to the transmitter terminals or to the HART connection posts:
   a) Remove the transmitter end-cap.
   b) Attach the leads from the field communicator to terminals 1 and 2 on the transmitter, or to the HART connection posts, and add resistance as required.

      The field communicator must be connected across a resistance of 250–600 Ω.

      Tip
      HART connections are not polarity-sensitive. It does not matter which lead you attach to which terminal.

Figure C-1: Field communicator connection to transmitter terminals

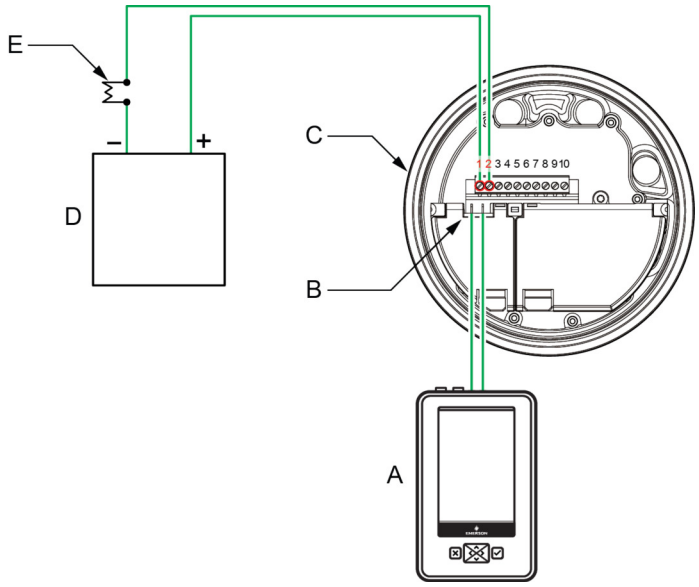

A. Field communicator
B. HART connection posts
C. Transmitter with end-cap removed
D. External power supply
E. 250–600 Ω resistance

2. To connect to a point in the local HART loop, attach the leads from the field communicator to any point in the loop and add resistance as necessary.

   The field communicator must be connected across a resistance of 250–600 Ω.

Figure C-2: Field communicator connection to local HART loop

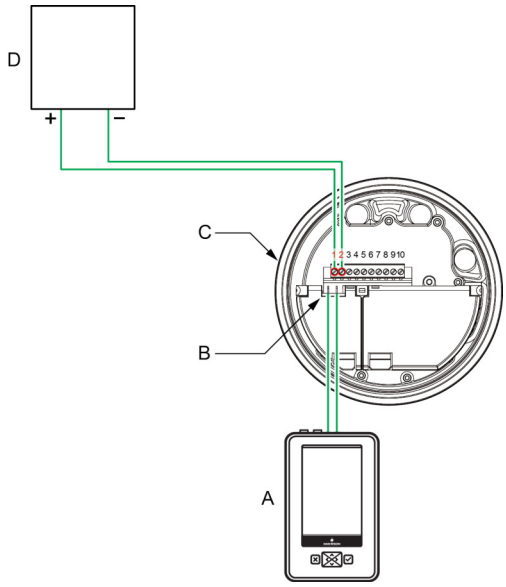

A. Field communicator
B. HART connection posts
C. Transmitter, with wiring compartment opened
D. Active host (the 250-600 Ω resistor is integrated into the host)

3. To connect to a point in the HART multidrop network, attach the leads from the field communicator to any point on the network.

Figure C-3: Field communicator connection to multidrop network (passive outputs)

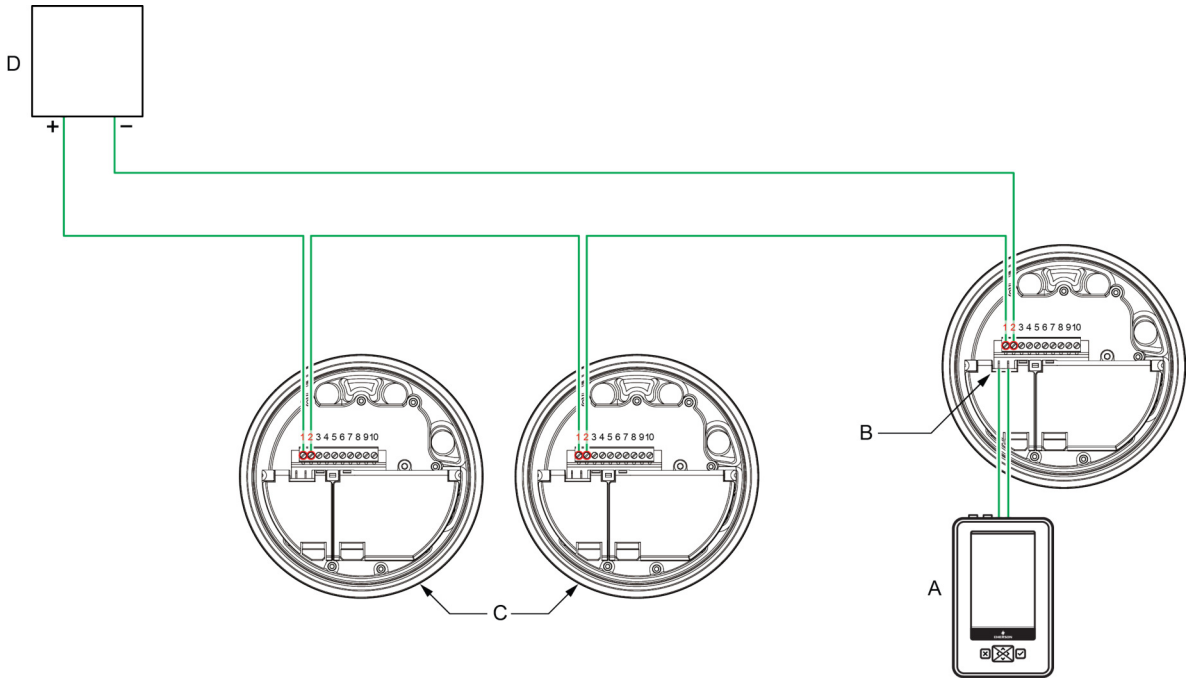

A. Field communicator
B. HART connection posts
C. Devices on the network
D. Active host (the 250-600 Ω resistor is integrated into the host)

4. Turn on the field communicator and wait until the main menu is displayed.
5. If you are connecting across a multidrop network:
   - Set the field communicator to poll. The device returns all valid addresses.
   - Enter the HART address of the transmitter. The default HART address is 0. However, in a multidrop network, the HART address has probably been set to a different, unique value.

Postrequisites

Tip
You may see messages related to the DD or active alerts. Press the appropriate buttons to ignore the message and continue.

Need help?
To establish a connection via HART, there must be a 1 VDC across the connection leads to communicate. If necessary, increase the resistance at the connection point until 1 VDC is achieved.

D Channel combinations

D.1 Rules for channel combinations

Use these rules to determine what channel types and channel combinations are valid on the transmitter.

Rule number	Rule
1	Channel A is always mA Output 1 (HART).
2	Channel B is always mA Output 2.
3	Channel C can be mA Output 3, Frequency Output 1, or Discrete Output 1.
4	Channel D can be Frequency Output 2 or Discrete Output 2.

D.2 Valid combinations for channel configuration

The following table shows all valid combinations for channel configuration. Depending on your purchase order, some channels may not be activated on your device.

Combination	Channel A	Channel B	Channel C	Channel D
Combination 1	mA Output 1	mA Output 2	mA Output 3	Frequency Output 2
Combination 2	mA Output 1	mA Output 2	mA Output 3	Discrete Output 2
Combination 3	mA Output 1	mA Output 2	Frequency Output 1	Frequency Output 2
Combination 4	mA Output 1	mA Output 2	Discrete Output 1	Frequency Output 2
Combination 5	mA Output 1	mA Output 2	Discrete Output 1	Discrete Output 2

E Concentration measurement matrices, derived variables, and process variables

E.1 Standard matrices for the concentration measurement application

The standard concentration matrices available from Micro Motion are applicable for a variety of process fluids. These matrices are included in the ProLink III installation.

Tip
If the standard matrices are not appropriate for your application, you can build a custom matrix or purchase a custom matrix from Micro Motion.

Matrix name	Description	Density unit	Temperature unit	Derived variable
Deg Balling	Matrix represents percent extract, by mass, in solution, based on °Balling. For example, if a wort is 10 °Balling and the extract in solution is 100% sucrose, the extract is 10% of the total mass.	g/cm^3	°F	Mass Concentration (Density)
Deg Brix	Matrix represents a hydrometer scale for sucrose solutions that indicates the percent by mass of sucrose in solution at a given temperature. For example, 40 kg of sucrose mixed with 60 kg of water results in a 40 °Brix solution.	g/cm^3	°C	Mass Concentration (Density)
Deg Plato	Matrix represents percent extract, by mass, in solution, based on °Plato. For example, if a wort is 10 °Plato and the extract in solution is 100% sucrose, the extract is 10% of the total mass.	g/cm^3	°F	Mass Concentration (Density)
HFCS 42	Matrix represents a hydrometer scale for HFCS 42 (high-fructose corn syrup) solutions that indicates the percent by mass of HFCS in solution.	g/cm^3	°C	Mass Concentration (Density)
HFCS 55	Matrix represents a hydrometer scale for HFCS 55 (high-fructose corn syrup) solutions that indicates the percent by mass of HFCS in solution.	g/cm^3	°C	Mass Concentration (Density)
HFCS 90	Matrix represents a hydrometer scale for HFCS 90 (high-fructose corn syrup) solutions that indicates the percent by mass of HFCS in solution.	g/cm^3	°C	Mass Concentration (Density)

E.2 Derived variables and calculated process variables

The concentration measurement application calculates a different set of process variables from each derived variable. The process variables are then available for viewing or reporting.

Derived variable	Description	Calculated process variables					
		Density at reference temp	Standard volume flow rate	Specific gravity	Concentration	Net mass flow rate	Net volume flow rate
Density at Reference	Mass/unit volume, corrected to a given reference temperature	✓	✓				
Specific Gravity	The ratio of the density of a process fluid at a given temperature to the density of water at a given temperature The two given temperature conditions do not need to be the same. **Note** The two given temperature conditions do not need to be the same.	✓	✓	✓			
Mass Concentration (Density)	The percent mass of solute or of material in suspension in the total solution, derived from reference density	✓	✓		✓	✓	
Mass Concentration (Specific Gravity)	The percent mass of solute or of material in suspension in the total solution, derived from specific gravity	✓	✓	✓	✓	✓	
Volume Concentration (Density)	The percent volume of solute or of material in suspension in the total solution, derived from reference density	✓	✓		✓		✓
Volume Concentration (Specific Gravity)	The percent volume of solute or of material in suspension in the total solution, derived from specific gravity	✓	✓	✓	✓		✓

Derived variable	Description	Calculated process variables					
		Density at reference temp	Standard volume flow rate	Specific gravity	Concentration	Net mass flow rate	Net volume flow rate
Concentration (Density)	The mass, volume, weight, or number of moles of solute or of material in suspension in proportion to the total solution, derived from reference density	✓	✓		✓		
Concentration (Specific Gravity)	The mass, volume, weight, or number of moles of solute or of material in suspension in proportion to the total solution, derived from specific gravity	✓	✓	✓	✓		

F Environmental compliance

F.1 RoHS and WEEE

In compliance with the RoHS directive (Restriction of Hazardous Substances) and the WEEE directive (Waste Electrical and Electronic Equipment), the battery in the 5700 transmitter cannot be serviced or replaced by users. If the battery requires replacement, contact customer service for replacement and disposal.

G Default values and ranges

The default values and ranges represent the typical factory transmitter configuration. Depending on how the transmitter was ordered, certain values may have been configured at the factory and are not represented in the default values and ranges.

Table G-1: Flow default values and ranges

Parameter	Default	Range	Comments
Flow direction	Normal		
Flow damping	0.64 sec[1]	0.0 – 60.0 sec	User-entered value is corrected to the nearest valid value in list of preset values. For gas applications, the recommended damping value is 3.2 seconds. A value of 2.56 will be automatically rounded up to 3.2 seconds.
Flow calibration factor	1.00005.13		For sensors, this value represents the FCF and FT factors concatenated.
Mass flow units	g/s		
Mass flow cutoff	Sensor-specific value set at factory		For most sensors, the typical setting is 0.05% to 0.10% of the sensor's rated maximum flow rate. For some sensors, the setting may be higher. For some applications, such as empty-full-empty batching, a higher value is recommended. Contact customer service for assistance.
Volume flow type	Liquid		
Volume flow units	L/s		
Volume flow cutoff	0/0 L/s	0.0 – *x* L/s	*x* is obtained by multiplying the flow calibration factor by 0.2, using units of L/s

Table G-2: Meter factor default values and ranges

Parameter	Default
Mass factor	1
Density factor	1
Volume factor	1

Table G-3: Density default values and ranges

Parameter	Default	Range	Comments
Density damping	1.28 sec	0.0-60 sec	User-entered value is corrected to nearest valid value in a list of preset values.
Density units	g/cm^3		
Density cutoff	0.2 g/cm^3	0.0 – 0.5 g/cm^3	
D1	0 g/cm^3		
D2	1 g/cm^3		
K1	1000 µsec	1,000 – 50,000 µsec	
K2	50,000 µsec	1,000 – 50,000 µsec	
FD	0		
Temp Coefficient	4.44	-20 – 20	

Table G-4: Two-phase flow default values and ranges

Parameter	Default	Range
Two-phase flow low limit	0.0 g/cm^3	0.0 – 10.0 g/cm^3
Two-phase flow high limit	5.0 g/cm^3	0.0 – 10.0 g/cm^3
Two-phase duration	0.0 sec	0.0 – 60.0 sec

Table G-5: Temperature default values and ranges

Parameter	Default	Range	Comments
Temperature damping	4.8 sec	0.0 – 80 sec	User-entered value is corrected to nearest valid value in a list of preset values.
Temperature units	Deg C		
Temperature calibration factor	1.00000T0.00 00		

Table G-6: Pressure default values and ranges

Parameter	Default
Pressure units	PSI
Flow factor	0
Density factor	0
Cal pressure	0

Table G-7: T-Series sensor default values and ranges

Parameter	Default
D3	0 g/cm^3
D4	0 g/cm^3
K3	0 µsec
K4	0 µsec
FTG	0
FFQ	0
DTG	0
DFQ1	0
DFQ2	0

Table G-8: Special units default values and ranges

Parameter	Default
Base mass unit	g
Base mass time	sec
Mass flow conversion factor	1
Base volume unit	L
Base volume time	sec
Volume flow conversion factor	1

Table G-9: Variable mapping default values and ranges

Parameter	Default
Primary variable	Mass flow
Secondary variable	Density
Tertiary variable	Volume flow
Quaternary variable	Temperature

Table G-10: mA Output 1 default values and ranges

Parameter	Default	Range	Comments
Primary variable	Mass flow		
LRV	–200.00000 g/s		
URV	200.00000 g/s		
AO cutoff	0.00000 g/s		
AO added damping	0.00000 sec		The user-entered value is corrected down to the nearest lower value in a list of preset values.

Table G-10: mA Output 1 default values and ranges *(continued)*

Parameter	Default	Range	Comments
LSL	–200 g/s		Read-only. LSL is calculated based on the sensor size and characterization parameters.
USL	200 g/s		Read only. USL is calculated based on the sensor size and characterization parameters.
MinSpan	0.3 g/s		Read-only
Fault action	Downscale		
AO fault level – downscale	2.0 mA	1.0 – 3.6 mA	
AO fault level - upscale	22 mA	21.0 – 24.0 mA	
Last measured value timeout	0.00 sec		

Table G-11: mA Output 2 default values and ranges

Parameter	Default	Range
Process variable	Density	
LRV	0.00 g/cm^3	
URV	10.00 g/cm^3	
AO cutoff	NAN	
AO added damping	0.00000 sec	
LSL	0.00 g/cm^3	
USL	10.00 g/cm^3	
MinSpan	0.05 g/cm^3	
Fault action	Downscale	
AO fault level – downscale	2.0 mA	1.0 – 3.6 mA
AO fault level - upscale	22 mA	21.0 – 24.0 mA
Last measured value timeout	0.00 sec	

Table G-12: LRV default values and ranges

Parameter	Default
Mass flow rate	-200 g/s
Volume flow rate	-200 L/s
Density	0.000 g/cm^3
Temperature	-240.000 °C
Drive gain	0.000 %

Table G-12: LRV default values and ranges *(continued)*

Parameter	Default
Gas standard volume flow rate	-423.78 SCFM
External temperature	-240.000 °C
External pressure	0.000 psi

Table G-13: URV default values and ranges

Parameter	Default
Mass flow rate	200.000 g/s
Volume flow rate	0.200 L/s
Density	10.000 g/cm^3
Temperature	450.000 °C
Drive gain	100.000%
Gas standard volume flow rate	423.78 SCFM
External temperature	450.000 °C
External pressure	100.000 psi

Table G-14: Frequency Output 1 default values and ranges

Parameter	Default	Range
Process variable	Mass flow rate	
Frequency factor	1,0000.00 Hz	0.001 – 10,000 Hz
Flow rate factor	1000.00 Hz	
Scaling method	Freq = Flow	0 or 0.5 – 277.5 ms
Frequency fault action	Downscale	
Frequency fault level - upscale	14,500 Hz	10.00 – 14,500 Hz
Frequency output polarity	Active high	
Last measured value timeout	0.0 seconds	0.0 – 60.0 sec

Table G-15: Discrete Output 2 default values and ranges

Parameter	Default
Source	Flow direction
Fault indicator	None
Power	Internal
Polarity	Active high

Table G-16: Display default values and ranges

Parameter	Default	Range
Backlight on/off	On	
Refresh rate	250 milliseconds	100 – 10,000 milliseconds
Variable 1	Mass flow rate	
Variable 2	Mass total	
Variable 3	Volume flow rate	
Variable 4	Volume total	
Variable 5	Density	
Variable 6	Temperature	
Variable 7	Drive gain	
Variable 8 - 15	None	
Display totalizer start/stop	Enabled	
Display totalizer reset	Enabled	
Display auto scroll	Off	
Display offline menu	Enabled	
Display offline password	Disabled	
Display alarm menu	Enabled	
Display acknowledge all alarms	Enabled	
Offline password	AAAA	
Auto scroll rate	10 sec	

MMI-20039472
Rev. AD
2021

For more information: **www.emerson.com**

©2021 Micro Motion, Inc. All rights reserved.

The Emerson logo is a trademark and service mark of Emerson Electric Co. Micro Motion, ELITE, ProLink, MVD and MVD Direct Connect marks are marks of one of the Emerson Automation Solutions family of companies. All other marks are property of their respective owners.

MICRO MOTION™

EMERSON™