MOUNTING AND OPERATING INSTRUCTIONS

EB 8493S EN

Translation of original instructions

HART® COMMUNICATION PROTOCOL

Series 3793 · TROVIS SAFE 3793 Electropneumatic Positioner with HART® communication

For on/off valves in safety-instrumented systems

Firmware version 1.00.05

CE Ex certified

Edition March 2019

EB + CD

Note on these mounting and operating instructions

These mounting and operating instructions assist you in mounting and operating the device safely. The instructions are binding for handling SAMSON devices.

➔ For the safe and proper use of these instructions, read them carefully and keep them for later reference.

➔ If you have any questions about these instructions, contact SAMSON's After-sales Service Department (aftersalesservice@samson.de).

The mounting and operating instructions for the devices are included in the scope of delivery. The latest documentation is available on our website at ***www.samson.de > Service & Support > Downloads > Documentation***.

Definition of signal words

⚠ DANGER

Hazardous situations which, if not avoided, will result in death or serious injury

⚠ WARNING

Hazardous situations which, if not avoided, could result in death or serious injury

NOTICE

Property damage message or malfunction

Note

Additional information

Tip

Recommended action

1 Safety instructions and measures 7
1.1 Notes on possible severe personal injury 10
1.2 Notes on possible personal injury 10
1.3 Notes on possible property damage 11
2 Markings on the device 13
2.1 Nameplate 13
2.2 Option modules 14
2.3 Electronic module 14
2.4 Article code 15
3 Design and principle of operation 18
3.1 Versions 22
3.2 Types of attachment 22
3.3 Configuration using the TROVIS-VIEW software 22
3.4 Device overview and operating controls 23
3.5 Accessories 24
3.6 Travel tables 29
3.7 Technical data 30
3.8 Dimensions in mm 36
3.9 Fixing levels according to VDI/VDE 3845 (September 2010) 40
4 Measures for preparation 41
4.1 Unpacking 41
4.2 Transporting 41
4.3 Storage 41
5 Mounting and start-up 42
5.1 Mounting position 42
5.2 Lever and pin position 42
5.3 Type 3277 Actuator 44
5.4 Attachment according to IEC 60534-6 46
5.5 Rotary actuators (heavy-duty version) 48
5.6 Air purging function for single-acting actuators 50
5.6.1 Direct attachment to Type 3277, 240 to 750 cm² 50
5.6.2 Attachment according to IEC 60534-6 (NAMUR rib or attachment to rod-type yokes) and to rotary actuators 50
5.7 Attachment according to VDI/VDE 3847 51
5.7.1 Preparing the positioner for attachment 52
5.7.2 Mounting on Type 3277 Actuator 54
5.7.3 Attachment according to IEC 60534-6 (NAMUR) 56

5.8 Pneumatic connections....58
5.9 Connecting the supply air....61
5.9.1 Signal pressure connection....61
5.9.2 Signal pressure gauges....61
5.9.3 Supply pressure....62
5.10 Electrical connections....63
5.10.1 Cable entry with cable gland....64
5.10.2 Connecting the electrical power....64
5.10.3 Establishing communication....65
5.10.4 Switching amplifier according to EN 60947-5-6....66

6 Optional modules....67
6.1 Pneumatic modules....68
6.1.1 Installing and removing pneumatic/dummy modules....69
6.2 Optional additional functions....72
6.2.1 Option modules....74
6.2.2 Slots for option modules....75
6.2.3 Dummy option module....76
6.2.4 Inserting or removing option modules....78
6.3 Hardware limit switches....82
6.3.1 Inserting hardware limit switches....82
6.3.2 Adjusting the switching points....85
6.3.3 Locking the shaft....85
6.4 Forced venting....86

7 Operation....87
7.1 Rotary pushbutton....87
7.2 Initialization key (INIT)....88
7.3 Switch for forced venting....88
7.4 Display....89
7.4.1 Menu structure....90
7.4.2 Display icons....91
7.4.3 Changing the display's reading direction....93
7.5 HART® communication....93
7.5.1 Dynamic HART® variables....94

8 Operating the positioner....95
8.1 First start-up....95
8.2 Start-up settings....96
8.3 Enabling configuration....96

8.4 Start-up menu 97
8.4.1 Setting the actuator type 97
8.4.2 Specifying the pin position 97
8.4.3 Setting the nominal range 98
8.4.4 Selecting the initialization mode 98
8.4.5 Setting the initialization mode 99
8.4.6 Defining the fail-safe position 102
8.4.7 Assigning the pneumatic primary output 102
8.4.8 Adjusting the software restriction 103
8.5 Initializing the positioner 103
8.6 Performing zero calibration 105
8.7 Resetting the positioner 106

9 Maintenance 107
9.1 Cleaning the window in the cover 107
9.2 Preparation for return shipment 107
9.3 Firmware update 108

10 Malfunctions 109
10.1 Emergency action 112

11 Decommissioning and removal 112
11.1 Decommissioning 112
11.2 Removing the positioner 113
11.3 Disposal 113

12 Appendix 114
12.1 After-sales service 114
12.2 Structure of the main display 114
12.3 Menu structure and parameters (menu level) 115
12.3.1 Parameters for on-site operation 115
12.3.2 Parameters of option modules 121
12.3.3 Readable process data 123
12.3.4 Diagnosis: status messages 125
12.3.5 Reset functions 129

1 Safety instructions and measures

Intended use

The SAMSON TROVIS SAFE 3793 Positioner is mounted onto on/off valves in safety-instrumented systems for discrete control of the set point. The device can be upgraded by adding pneumatic modules and/or option modules and is designed to operate under exactly defined conditions (e.g. operating pressure, temperature). Therefore, operators must ensure that the positioner is only used in applications where the operating conditions correspond to the technical data. In case operators intend to use the positioner in other applications or conditions than specified, contact SAMSON.

SAMSON does not assume any liability for damage resulting from the failure to use the device for its intended purpose or for damage caused by external forces or any other external factors.

➔ Refer to the technical data for limits and fields of application as well as possible uses.

Reasonably foreseeable misuse

The TROVIS SAFE 3793 Positioner is ***not*** suitable for the following applications:

– Use outside the limits defined during sizing and by the technical data

Furthermore, the following activities do not comply with the intended use:

– Use of non-original spare parts
– Performing maintenance activities not specified by SAMSON

Qualifications of operating personnel

The positioner must be mounted, started up and serviced by fully trained and qualified personnel only; the accepted industry codes and practices are to be observed. According to these mounting and operating instructions, trained personnel refers to individuals who are able to judge the work they are assigned to and recognize possible hazards due to their specialized training, their knowledge and experience as well as their knowledge of the applicable standards.

Explosion-protected versions of this device must be operated only by personnel who has undergone special training or instructions or who is authorized to work on explosion-protected devices in hazardous areas.

Personal protective equipment

No personal protective equipment is required for the direct handling of the positioner. Work on the control valve may be necessary when mounting or removing the device.

➔ Observe the requirements for personal protective equipment specified in the valve documentation.

➔ Check with the plant operator for details on further protective equipment.

Revisions and other modifications

Revisions, conversions or other modifications of the product are not authorized by SAMSON. They are performed at the user's own risk and may lead to safety hazards, for example. Furthermore, the product may no longer meet the requirements for its intended use.

Safety features

Upon failure of the air supply, the positioner vents the actuator, causing the valve to move to the fail-safe position determined by the actuator. Upon failure of the electrical signal, the pneumatic outputs of the positioner are either vented or filled with air depending on the combination of the pneumatic modules (see Table 14 on page 69). An automated step response test is started to retain the valve's ability to move when the set point is between the predefined upper and lower test limits.

Warning against residual hazards

The positioner has direct influence on the control valve. To avoid personal injury or property damage, plant operators and operating personnel must prevent hazards that could be caused in the control valve by the process medium, the operating pressure, the signal pressure or by moving parts by taking appropriate precautions. They must observe all hazard statements, warning and caution notes in these mounting and operating instructions, especially for installation, start-up and service work.

If inadmissible motions or forces are produced in the pneumatic actuator as a result of the supply pressure, it must be restricted using a suitable supply pressure reducing station.

Responsibilities of the operator

The operator is responsible for proper operation and compliance with the safety regulations. Operators are obliged to provide these mounting and operating instructions to the operating personnel and to instruct them in proper operation. Furthermore, the operator must ensure that operating personnel or third persons are not exposed to any danger.

Responsibilities of operating personnel

Operating personnel must read and understand these mounting and operating instructions as well as the specified hazard statements, warning and caution notes. Furthermore, the operating personnel must be familiar with the applicable health, safety and accident prevention regulations and comply with them.

Servicing explosion-protected devices

If a part of the device on which the explosion protection is based needs to be serviced, the device must not be put back into operation until a qualified inspector has assessed it according to explosion protection requirements, has issued an inspection certificate or given the device a mark of conformity. Inspection by a qualified inspector is not required if the manufacturer performs a routine test on the device before putting it back into operation. Document the passing of the routine test by attaching a mark of conformity to the device. Replace explosion-protected components only with original, routine-tested components by the manufacturer.

Devices that have already been operated outside hazardous areas and are intended for future use inside hazardous areas must comply with the safety requirements placed on serviced devices. Before being operated inside hazardous areas, test the devices according to the specifications for servicing explosion-protected devices.

Maintenance, calibration and work on equipment

➔ Only use intrinsically safe current/voltage calibrators and measuring instruments for interconnection with intrinsically safe circuits to check or calibrate the equipment inside or outside hazardous areas.

➔ Observe the maximum permissible values specified in the certificates for intrinsically safe circuits.

Referenced standards and regulations

Devices with a CE marking fulfill the requirements of the Directives 2014/30/EU and 2014/34/EU. The declarations of conformity are included at the end of these instructions.

Referenced documentation

The following documents apply in addition to these mounting and operating instructions:

– Operating instructions for valve diagnostics: ▶ EB 8389-2S
– The mounting and operating instructions of the components on which the positioner is mounted (valve, actuator, valve accessories etc.).

1.1 Notes on possible severe personal injury

⚠ DANGER

Risk of fatal injury due to the formation of an explosive atmosphere.

Incorrect installation, operation or maintenance of the positioner in potentially explosive atmospheres may lead to ignition of the atmosphere and cause death.

➔ The following regulations apply to installation in hazardous areas: EN 60079-14 (VDE 0165, Part 1).

➔ Installation, operation or maintenance of the positioner must only performed by personnel who has undergone special training or instructions or who is authorized to work on explosion-protected devices in hazardous areas.

1.2 Notes on possible personal injury

⚠ WARNING

Risk of personal injury due to moving parts on the valve.

During initialization of the positioner and during operation, the actuator stem moves through its entire travel range. Injury to hands or fingers is possible if they are inserted into the valve.

➔ During initialization, do not insert hands or fingers into the valve yoke and do not touch any moving valve parts.

1.3 Notes on possible property damage

NOTICE

Risk of damage to the positioner due to incorrect mounting position.

➔ Do not mount the positioner with the back of the device facing upward.

➔ Do not seal or restrict the vent opening when the device is installed on site.

Risk of malfunction due to incorrect sequence during start-up.

The positioner can only work properly if the mounting and start-up are performed in the prescribed sequence.

➔ Perform mounting and start-up as described in section 5 in page 42.

An incorrect electric signal will damage the positioner.

A current source must be used to provide the electrical power for the positioner.

➔ Only use a current source and never a voltage source.

Incorrect assignment of the terminals will damage the positioner and will lead to malfunction.

For the positioner to function properly, the prescribed terminal assignment, especially at the option modules used, must be observed.

➔ Connect the electrical wiring to the positioner and option modules according to the prescribed terminal assignment.

Electrostatic discharge will damage the option modules.

Components at risk can be destroyed by even small electrostatic discharge.

➔ Observe the ESD requirements according to IEC 61340-5-1.

➔ Only store option modules in their original packaging.

Risk of damage of the positioner and option modules due to incorrectly assigned slots.

The slots for the option modules are ready assigned (see section 6.2.2).

➔ Only insert option modules in their designated slots.

Malfunction due to initialization not yet completed.

The initialization causes the positioner to be adapted to the mounting situation. After initialization is completed, the positioner is ready to use.

➔ Initialize the positioner on the first start-up.

➔ Re-initialize positioner after changing the mounting position.

➔ Initialize positioner after replacing or adding pneumatic or option modules.

Risk of positioner damage due to incorrect grounding of the electric welding equipment.

➔ Do not ground electric welding equipment near to the positioner.

Incorrect cleaning will damage the window.

The window is made of Makrolon® and will be damaged when cleaned with abrasive cleaning agents or agents containing solvents.

➔ Do not rub the window dry.

➔ Do not use any cleaning agents containing chlorine or alcohol or abrasive cleaning agents.

➔ Use a non-abrasive, soft cloth for cleaning.

2 Markings on the device

2.1 Nameplate

Explosion-protected version

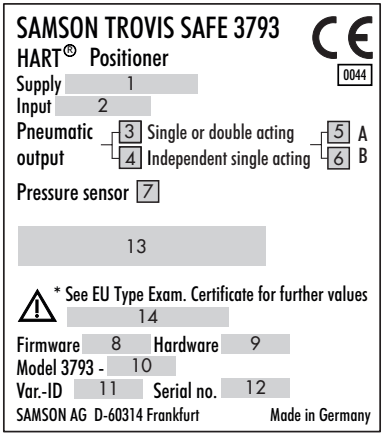

Version without explosion protection

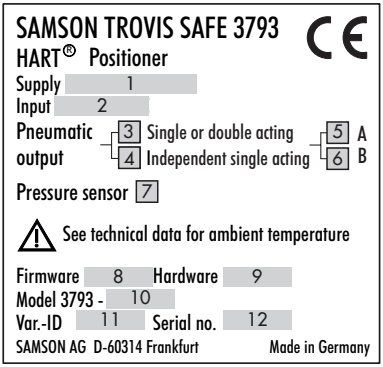

1 Supply pressure
2 Signal range
3 Single and double-acting pneumatic module (yes/no)
4 2x independent, single-acting pneumatic module (yes/no)
5 Slot A occupied (yes/no)
6 Slot B occupied (yes/no)
7 Pressure sensor (yes/no)
8 Firmware version
9 Hardware version
10 Model no.
11 Configuration ID
12 Serial number
13 Type of protection for explosion-protected devices
14 Temperature limits in the test certificates for the explosion-protected devices

2.2 Option modules

If option modules (see section 6.2) are installed into the TROVIS SAFE 3793 Positioner, a label to identify each module is affixed to the device.

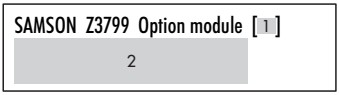

1 ID code of the option module
2 Function of the option module
➔ See Table 15 on page 74

2.3 Electronic module

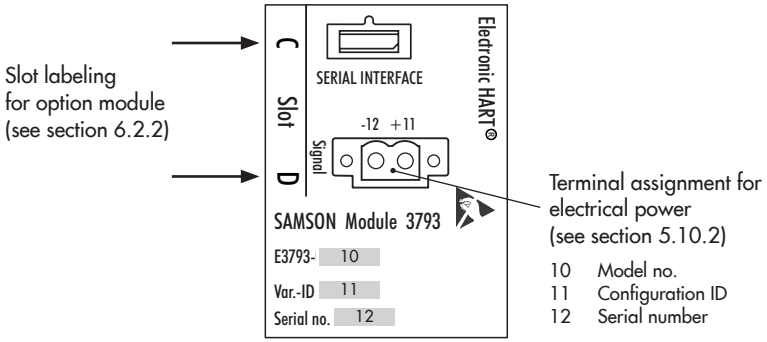

2.4 Article code

Positioner	TROVIS SAFE 3793-	x	x	x	5	x	x	x	x	x	x	x	0	0	0	x	0	x	0	x	0	0	9	9	x	x
With LCD, autotune, HART® communication																										
Explosion protection																										
Without		0	0	0																						
ATEX	II 2 G Ex ia IIC T4/T6 Gb II 2 D Ex ia IIIC T 85 °C Db	1	1	0																						
	II 2 D Ex tb IIIC T 85 °C Db	5	1	0																						
	II 3 G Ex nA IIC T4/T6 Gc II 2 D Ex tb IIIC T 85 °C Db	8	1	0																						
	II 3 G Ex nA IIC T4/T6 Gc	8	5	0																						
EAC	1Ex ia IIC T4/T6 Gb X Ex ia IIIC T85°C Db X	1	1	3																						
	2Ex nA IIC T4/T6 Gc X Ex tb IIIC T85°C Db X	8	1	3																						
IECEx	Ex ia IIC T4/T6 Gb Ex ia IIIC T 85 °C Db	1	1	1																						
	Ex tb IIIC T 85 °C Db	5	1	1																						
	Ex nA IIC T4/T6 Gc Ex tb IIIC T 85 °C Db	8	1	1																						
	Ex nA IIC T4/T6 Gc	8	5	1																						
FM	IS Class I, II, III, Division 1, Groups A, B, C, D, E, F, G; Type 4X NI Class I, II, III, Division 2, Groups A, B, C, D, E, F, G; Type 4X Class I, Zone 1, AEx ia IIC; Type 4X	1	3	0																						
NEPSI	Ex ia IIC T6...T4 Gb Ex iaD 21 T85	1	1	2																						
	Ex tD A21 IP66 T85°C	5	1	2																						
	Ex nA IIC T6...T4 Gc Ex tD A21 IP66 T85°C	8	1	2																						
	Ex nA IIC T4...T6 Gc	8	5	2																						
Pneumatics																										
Single/double acting, K_V = 0.35						0	1																			
Single/double acting, K_V = 0.70						0	2																			
Single acting, 2x independent K_V = 0.35						0	3																			

Positioner	TROVIS SAFE 3793- x	x	x	5	x	x	x	x	x	x	x	0	0	0	x	0	x	0	x	0	0	9	9	x	x
Option module 1 (slot C)																									
Without/dummy module	0	0																							
Software limit switches + binary output (NAMUR), [N]	1	0																							
Software limit switches + binary output (PLC), [X] [1)]	1	1																							
Position transmitter + binary input/output (NAMUR), [T]	4	0																							
Forced venting + Binary input/output (NAMUR), [V]	8	0																							
Option module 2 (slot D)																									
Without/dummy module			0	0																					
Software limit switches + binary output (NAMUR), [N]			1	0																					
Software limit switches + binary output (PLC), [X] [1)]			1	1																					
Inductive limit switches + binary output (NAMUR), [P]; –50 to +85 °C			1	5																					
Mechanical limit switches, [M]; –40 to +85 °C			3	0																					
Position transmitter + binary input/output (NAMUR), [T]			4	0																					
Pressure sensors																									
Without							0																		
Standard (Supply 9, Output 138, Output 238); –40 to +85 °C							1																		
Electrical connection																									
M20x1.5 (one cable gland, three blanking plugs)								1																	
½-14 NPT (one cable gland, three blanking plugs)								4																	
Housing material																									
Aluminum (standard)											0														
Special applications																									
Without													0												
Additional certification																									
Without														0											
Permissible ambient temperature																									
Standard: –20 to +85 °C, plastic cable gland															0										
–40 to +85 °C metal cable gland															1										
–55 to +85 °C, low-temperature version with metal cable gland															2										
Display text in different languages																									
Standard (English and German)																	0								

Positioner	TROVIS SAFE 3793- x x x 5 x x x x x x x x 0 0 0 x 0 x 0 x 0 0 9 9 x x
Special version	
Without	0
Cover without window	1
Hardware version	
1.00.00	9 9
Firmware version	
1.00.05	9 6

1) The option module for *Software limit switches + Binary output (PLC), [X]* is not available in the explosion-protection version.

3 Design and principle of operation

➔ Refer to Fig. 1

The TROVIS SAFE 3793 Electropneumatic Positioner is mounted on pneumatic control valves and used to assign the valve position (controlled variable x) to the control signal (set point w). The discrete analysis of the set point w is performed in automatic mode. The positioner moves the valve to the operating point or fail-safe position (see Fig. 2 on page 20) depending on the defined switching thresholds. An automated step response test is started (see Fig. 3 on page 21) when the set point is between the predefined upper and lower test limits.

The positioner mainly consists of a non-contact travel sensor system (2), pneumatics and the electronics with the microcontroller (4). The output of the standard version is either single or double acting; which means both the Output 138 and Output 238 can provide the output variable and route the signal pressure to the actuator.

The positioner can be configured to meet requirements of an application by adding a maximum of two pneumatic modules (A, B) and electronic option modules (C, D). The pneumatic modules mainly consist of a microcontroller, which operates an i/p converter with downstream spool valve. Depending on the actuator used, an output of the positioner can be sealed to achieve a single-acting function. The option modules additionally provide individual functions, e.g. recognition of the end positions. A list can be found in section 6.2.1.

The valve position is transmitted either as an angle of rotation or a travel to the pick-up lever, from there to the travel sensor (2) and forwarded to the microcontroller (4). The PID algorithm in the microcontroller compares the valve position measured by the travel sensor (2) to the 4 to 20 mA DC control signal issued by the control system after it has been converted by the A/D converter (3). In case of a set point deviation, the pneumatic module (A, B) causes the actuator (1) to be either vented or filled with air. As a result, the closure member of the valve (e.g. plug) is moved to the position determined by the set point.

The pneumatic module is supplied with air. The flow rate of the module's output can be restricted by software.

The positioner is operated by a rotary push-button (9) for menu navigation on the plain-text display (8).

The extended EXPERTplus diagnostics are integrated into the positioner. They provide information on the control valve and positioner and generate diagnostic and status messages, which allow faults to be pinpointed quickly.

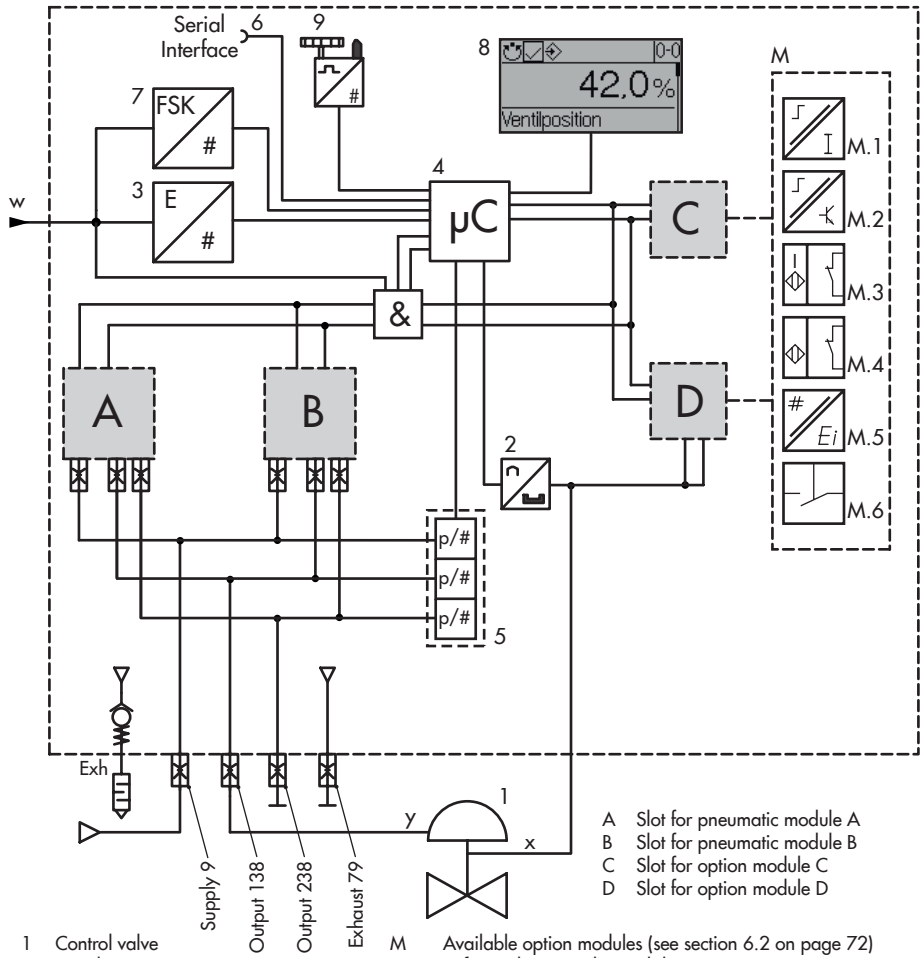

A Slot for pneumatic module A
B Slot for pneumatic module B
C Slot for option module C
D Slot for option module D

1 Control valve
2 Travel sensor
3 A/D converter
4 Microcontroller
5 Pressure sensors
6 Communication interface
7 HART® connection
8 Display
9 Rotary pushbutton

M Available option modules (see section 6.2 on page 72)
M.1 Software limit switches with binary output (NAMUR)
M.2 Software limit switches with binary output (PLC)
M.3 Inductive limit switches with binary output (NAMUR)
M.4 Mechanical limit switches
M.5 Position transmitter with binary input and output
M.6 Forced venting with binary input and output

Fig. 1: *Block diagram*

On/off valve with ATO setting

If the set point (w, - - -) is below 75 % when the automatic mode starts, the valve (x, —) closes. If the set point rises and exceeds 75 %, the valve fully opens. If the set point continues to drop under 12.5 %, the valve closes.

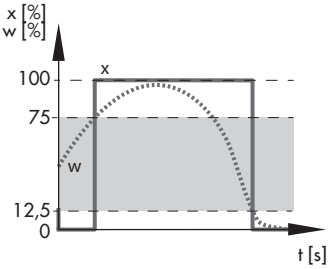

On/off valve with ATC setting

If the set point (w, - - -) is above 12.5 % when the automatic mode starts, the valve (x, —) fully opens. If the set point drops below 12.5 %, the valve closes. If the set point continues to rise and exceeds 75 %, the valve fully opens.

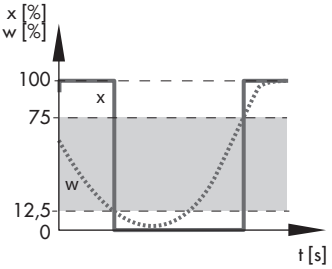

If the set point (w, - - -) is above 75 % when the automatic mode starts, the valve (x, —) fully opens. If the set point continues to drop under 12.5 %, the valve closes.

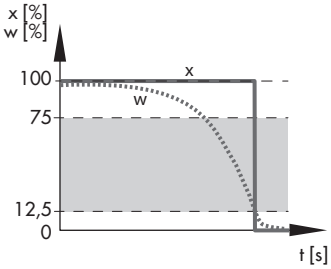

If the set point (w, - - -) is below 12.5 % when the automatic mode starts, the valve (x, —) closes. If the set point continues to rise and exceeds 75 %, the valve fully opens.

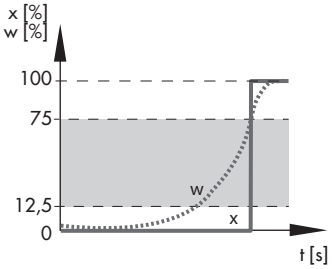

Further information on EXPERTplus Valve Diagnostics ▶ EB 8389-2S.

Fig. 2: *Discrete set point analysis*

On/off valve with ATO setting

Triggering the step response test (PST)

A step response test is started when the set point (w, - - -) moves into the range between 25 and 50 % of the travel (x, —) and remains there for longer than six seconds.

After the step response test is completed, the valve moves back to its previous position (open or closed).

Canceling the step response test

The step response test is canceled whenever the set point (w, - - -) leaves the range between 25 and 50 %. After the step response test is canceled, the valve (x, —) moves back to its previous position (open or closed).

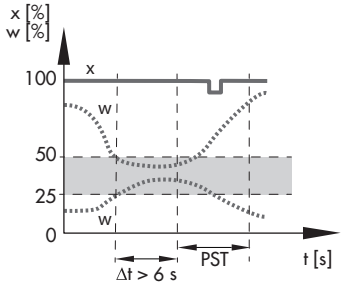

On/off valve with ATC setting

Triggering the step response test (PST)

A step response test is started when the set point (w, - - -) moves into the range between 25 and 50 % of the travel (x, —) and remains there for longer than six seconds.

After the step response test is completed, the valve moves back to its previous position (open or closed).

Canceling the step response test

The step response test is canceled whenever the set point (w, - - -) leaves the range between 25 and 50 %. After the step response test is canceled, the valve (x, —) moves back to its previous position (open or closed).

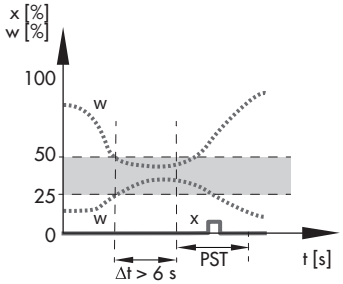

Further information on EXPERTplus Valve Diagnostics ▶ EB 8389-2S.

Fig. 3: *Step response test*

3.1 Versions

The TROVIS SAFE 3793 Electropneumatic Positioner can be used as a single or double-acting positioner, depending on the combination of the available pneumatic modules.

The modular design also allows diverse optional additional functions to be added and adapt the positioner on site to the specific requirements.

Details to the optional modules:
➔ See section 6 on page 67.

3.2 Types of attachment

The TROVIS SAFE 3793 Positioner is suitable for the following types of attachment using the corresponding accessories (see section 3.5):

– **Direct attachment to Type 3277 Actuator:**
The positioner is mounted on the yoke. The signal pressure is connected to the actuator over a connection block: internally over a hole in the valve yoke for "actuator stem extends" fail-safe action and through an external signal pressure line for "actuator stem retracts" fail-safe action.
➔ See section 5.3

– **Attachment to actuators according to IEC 60534-6:**
The positioner is mounted to the control valve using a NAMUR bracket.
➔ See section 5.4

– **Attachment to rotary actuators according to VDI/VDE 3845:**
The positioner is mounted to the rotary actuator using the corresponding accessories.
➔ See section 5.5

– **Attachment according to VDI/VDE 3847:**
Attachment according to VDI/VDE 3847 using the corresponding accessories allows the positioner to be replaced quickly while the process is running.
➔ See section 5.7

3.3 Configuration using the TROVIS-VIEW software

The positioner can be configured with SAMSON's TROVIS-VIEW Software (version 4). For this purpose, the positioner has a digital interface (**SSP**) to allow the USB port of a computer to be connected to it using an adapter cable.

The TROVIS-VIEW software enables the user to easily configure the positioner as well as view process parameters online.

i ***Note***

TROVIS-VIEW can be downloaded free of charge from our website at www.samson.de > Service & Support > Downloads > TROVIS-VIEW.

3.4 Device overview and operating controls

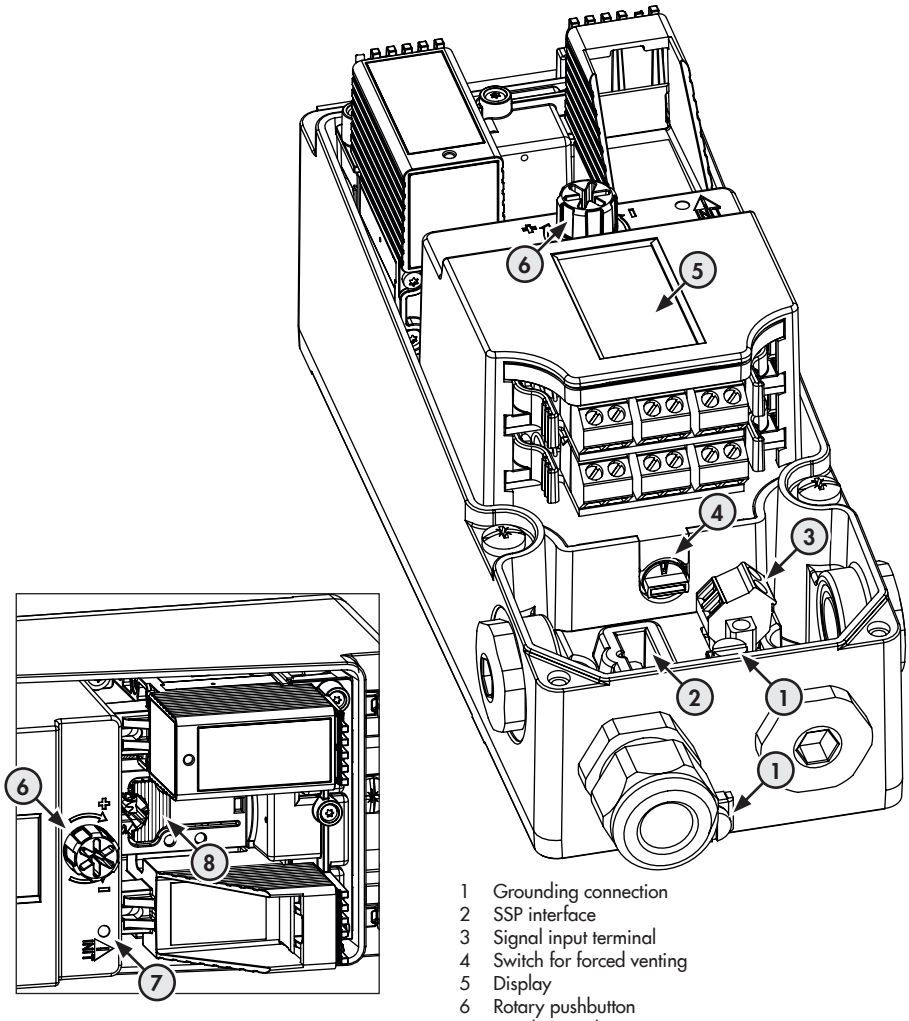

1 Grounding connection
2 SSP interface
3 Signal input terminal
4 Switch for forced venting
5 Display
6 Rotary pushbutton
7 Initialization key (INIT)
8 Locking the shaft

Fig. 4: *Operating controls*

3.5 Accessories

Table 1: *General accessories*

Designation		Order no.
Aluminum dummy plate for pneumatic connections Stainless steel dummy plate for pneumatic connections		1402-1079 1402-1438
Cable gland M20x1.5	Black plastic (6 to 12 mm clamping range)	8808-1011
	Blue plastic (6 to 12 mm clamping range)	8808-1012
	Nickel-plated brass (6 to 12 mm clamping range)	1890-4875
	Nickel-plated brass (10 to 14 mm clamping range)	1992-8395
	Stainless steel 1.4305 (8 to 14.5 mm clamping range)	8808-0160
Adapter M20x1.5 to ½ NPT	Powder-coated aluminum	0310-2149
	Stainless steel	1400-7114
M lever		0510-0510
L lever		0510-0511
XL lever		0510-0512
XXL lever		0510-0525
TROVIS-VIEW 6661		
Isolated USB interface adapter (SAMSON SSP interface to USB port on a computer) including TROVIS-VIEW CD-ROM		1400-9740
Set of spare parts, consisting of: – 2x Molded seal for pneumatic interface – 4x Filter – 2x Cover hinge clip		1402-1582

Table 2: *Direct attachment to Type 3277 (section 5.3)*

Mounting parts/accessories		Order no.
Standard mounting kit for direct attachment to actuators (240, 350, 355, 700, 750 cm²)		1400-7453
Connection block with seals and screw	G ¼	1400-8819
	¼ NPT	1402-0901
Pressure gauge mounting kit up to max. 6 bar (output/supply)	Stainless steel/brass	1402-0938
	Stainless steel/stainless steel	1402-0939
Piping with screw fittings [1]		**Order no.**
Actuator (240 cm²), steel	G ¼/G ⅜	1400-6444
	¼ NPT/⅜ NPT	1402-0911
Actuator (240 cm²), stainless steel	G ¼/G ⅜	1400-6445
	¼ NPT/⅜ NPT	1402-0912
Actuator (350 cm²), steel	G ¼/G ⅜	1400-6446
	¼ NPT/⅜ NPT	1402-0913
Actuator (350 cm²), stainless steel	G ¼/G ⅜	1400-6447
	¼ NPT/⅜ NPT	1402-0914
Actuator (355 cm²), steel	G ¼/G ⅜	1402-0972
	¼ NPT/⅜ NPT	1402-0979
Actuator (355 cm²), stainless steel	G ¼/G ⅜	1402-0973
	¼ NPT/⅜ NPT	1402-0980
Actuator (700 cm²), steel	G ¼/G ⅜	1400-6448
	¼ NPT/⅜ NPT	1402-0915
Actuator (700 cm²), stainless steel	G ¼/G ⅜	1400-6449
	¼ NPT/⅜ NPT	1402-0916
Actuator (750 cm²), steel	G ¼/G ⅜	1402-0974
	¼ NPT/⅜ NPT	1402-0981
Actuator (750 cm²), stainless steel	G ¼/G ⅜	1402-0975
	¼ NPT/⅜ NPT	1402-0982

[1] For "actuator stem retracts" direction of action;
with air purging of the top diaphragm chamber;
air purging of the diaphragm chamber for "actuator stem extends" direction of action

Table 3: *Attachment to NAMUR rib or attachment to rod-type yokes [1] according to IEC 60534-6 (section 5.4)*

Travel in mm	Lever	For actuator	Order no.
5 to 50	M[2]	Actuators from other manufacturers and Type 3271 with 240 to 750 cm² effective areas	1400-7454
14 to 100	L	Actuators from other manufacturers and Type 3271 with 1000 and 1400-60 cm²	1400-7455
30 or 60	L	Type 3271, 1400-120 and 2800 cm² versions with 30/60 mm travel	1400-7466
		Mounting brackets for Emerson and Masoneilan linear actuators (in addition, a mounting kit according to IEC 60534-6 is required depending on the travel). See rows above.	1400-6771
		Valtek Type 25/50	1400-9554
40 to 200	XL	Actuators from other manufacturers and Type 3271 with 1400-120 and 2800 cm² and with 120 mm travel	1400-7456
60 to 300	XXL	Actuators from other manufacturers and Type 3271, 1400-250 cm² with 250 mm travel	1402-0806

Accessories		Order no.
Connecting plate, aluminum	G ¼	1402-1434
	¼ NPT	1402-1435
Connecting plate, stainless steel	G ¼	1402-1436
	¼ NPT	1402-1437
Pressure gauge bracket, two pressure gauges, aluminum	G ¼	1402-1599
	¼ NPT	1402-1600
Pressure gauge bracket, two pressure gauges, stainless steel	G ¼	1402-1601
	¼ NPT	1402-1602
Pressure gauge bracket, three pressure gauges, aluminum	G ¼	1402-1578
	¼ NPT	1402-1579
Pressure gauge bracket, three pressure gauges, stainless steel	G ¼	1402-1580
	¼ NPT	1402-1581
Pressure gauge mounting kit, with two pressure gauges up to 6 bar	Stainless steel/brass	1402-0938
	Stainless steel/stainless steel	1402-0939
Pressure gauge mounting kit, with two pressure gauges up to 10 bar		1402-1583
Pressure gauge mounting kit, with three pressure gauges up to 10 bar		1402-1528

[1] 20 to 35 mm rod diameter
[2] M lever is mounted on basic device (included in the scope of delivery)

Table 4: *Attachment according to VDI/VDE 3847*

Mounting parts	Order no.
Interface adapter VDI/VDE 3847 for TROVIS SAFE 3793	1402-1527
Pressure gauge mounting kit, with three pressure gauges up to 10 bar	1402-1528
Interface adapter [1] VDI/VDE 3847 for Type 3730	1402-0257
Mounting kit for attachment to SAMSON Type 3277 Actuator with 175 to 750 cm^2	1402-0868
Mounting kit for attachment to SAMSON Type 3271 Actuator or third-party actuators	1402-0869
Travel pick-off for valve travel up to 100 mm	1402-0177
Travel pick-off for 100 to 200 mm valve travel (SAMSON Type 3271 Actuator only)	1402-0178

[1] No air purging function, single-acting function only

Table 5: *Attachment to rotary actuators (section 5.5)*

Mounting parts/accessories			Order no.
Attachment according to VDI/VDE 3845 (September 2010), actuator surface corresponds to fixing level 1			
	Size AA1 to AA4, heavy-duty version		1400-9244
	Size AA5, heavy-duty version (e.g. Air Torque 10 000)		1400-9542
	Bracket surface corresponds to fixing level 2, heavy-duty version		1400-9526
Attachment to SAMSON Type 3278 with 160 cm² and to VETEC Type S160, Type R and Type M, heavy-duty version			1400-9245
Attachment to SAMSON Type 3278 with 320 cm² and to VETEC Type S320, heavy-duty version			1400-5891 and 1400-9526
Attachment to Camflex II			1400-9120
Accessories	Connecting plate, aluminum	G ¼	1402-1434
		¼ NPT	1402-1435
	Connecting plate, stainless steel	G ¼	1402-1436
		¼ NPT	1402-1437
	Pressure gauge bracket, two pressure gauges, aluminum	G ¼	1402-1599
		¼ NPT	1402-1600
	Pressure gauge bracket, two pressure gauges, stainless steel	G ¼	1402-1601
		¼ NPT	1402-1602
	Pressure gauge bracket, three pressure gauges, aluminum	G ¼	1402-1578
		¼ NPT	1402-1579
	Pressure gauge bracket, three pressure gauges, stainless steel	G ¼	1402-1580
		¼ NPT	1402-1581
	Pressure gauge mounting kit, with two pressure gauges up to 6 bar	Stainless steel/brass	1402-0938
		Stainless steel/stainless steel	1402-0939
	Pressure gauge mounting kit, with two pressure gauges up to 10 bar		1402-1583
	Pressure gauge mounting kit, with three pressure gauges up to 10 bar		1402-1528

3.6 Travel tables

Note

*The **M** lever is included in the scope of delivery.*
***L, XL, XXL** levers for attachment according to IEC 60534-6 (NAMUR) are available as accessories (see Table 3 on page 26).*

Table 6: *Direct attachment to Type 3277 Actuator*

Actuator size [cm²]	Rated travel [mm]	Adjustment range at positioner Travel [mm]	Required lever	Assigned pin position
240/350	15	7.0 to 35.0	M	35
355/700/750	30	10.0 to 50.0	M	50

Table 7: *Attachment according to IEC 60534-6 (NAMUR)*

SAMSON valves with Type 3271 Actuator		Adjustment range at positioner Other control valves		Required lever	Assigned pin position
Actuator size [cm²]	Rated travel [mm]	Min. travel [mm]	Max. travel [mm]		
240/350/355/ 700/750	7.5 and 15	7.0	35.0	M	35
355/700/750	30	10.0	50.0	M	50
1000/1400/2800	30	14.0	70.0	L	70
	60	20.0	100.0	L	100
1400/2800	120	40.0	200.0	XL	200
1400	250	60.0	300.0	XXL	300

Table 8: *Attachment to rotary actuators*

Opening angle	Required lever	Assigned pin position
24 to 100°	M	90°

3.7 Technical data

Table 9: *TROVIS SAFE 3793 Electropneumatic Positioner*

Travel		
Adjustable travel for	Direct attachment to Type 3277: Attachment according to IEC 60534-6 (NAMUR): Attachment according to VDI/VDE 3847 Attachment to rotary actuators:	3.6 to 30 mm 5 to 300 mm 5 to 300 mm 24 to 100° (170° [1])
Set point w		
Signal range	4 to 20 mA Two-wire device, reverse polarity protection, split-range operation (can be configured as required, minimum span 4 mA)	
Static destruction limit	40 V, internal current limit approx. 40 mA	
Minimum current	3.75 mA for display/operation (HART® communication and configuration) 3.90 mA for pneumatic function	
Load impedance	≤ 9.9 V (corresponds to 495 Ω at 20 mA)	
Supply air		
Supply air	2.5 to 10 bar/30 to 150 psi	
Air quality acc. to ISO 8573-1	Max. particle size and density: Oil content: Pressure dew point:	Class 4 Class 3 Class 3 or at least 10 K below the lowest ambient temperature to be expected
Signal pressure (output)	0 bar up to supply pressure	
Hysteresis	≤0.3 %	
Sensitivity	≤0.1 %, adjustable by software	
Start-up time	After interrupted operation < 300 ms: 100 ms After interrupted operation > 300 ms: ≤2 s	
Transit time	Up to 10000 s separately adjustable for exhaust and supply air by software	
Direction of action	Reversible	
Air consumption [2]	≤300 l_n/h with 6 bar supply pressure, depending on module	

[1] On request
[2] Based on temperature range –40 to +85 °C

Air output capacity (when Δp = 6 bar)	
Actuator (supply)	32 m_n^3/h with 1 pneumatic module ($K_{V\ max\ (20\ °C)}$ = 0.34)
	60 m_n^3/h with 2 pneumatic modules of the same sort ($K_{V\ max\ (20\ °C)}$ = 0.64)
Actuator (exhaust)	37 m_n^3/h with 1 pneumatic module ($K_{V\ max\ (20\ °C)}$ = 0.40)
	70 m_n^3/h with 2 pneumatic modules of the same sort ($K_{V\ max\ (20\ °C)}$ = 0.75)
Environmental conditions and permissible temperatures	
Permissible environmental conditions according to EN 60721-3	
Storage	1K6 (relative humidity ≤95 %)
Transport	2K4
Operation	4K4 −20 to +85 °C: All versions −40 to +85 °C: With metal cable glands −55 to +85 °C: Low-temperature versions with metal cable glands Observe the limits in the test certificate for explosion-protected versions.
Resistance to vibration	
Vibrations (sinusoidal)	According to DIN EN 60068-2-6: 0.15 mm, 10 to 60 Hz; 20 m/s², 60 to 500 Hz per axis 0.75 mm, 10 to 60 Hz; 100 m/s², 60 to 500 Hz per axis
Bumps (half sine)	According to DIN EN 60068-2-29: 150 m/s², 6 ms; 4000 bumps per axis
Noise	According to DIN EN 60068-2-64: 10 to 200 Hz: 1 (m/s²)²/Hz 200 to 500 Hz: 0.3 (m/s²)²/Hz 4 h/axis
Recommended continuous duty	≤20 m/s²
Influences	
Temperature	≤0.15 %/10 K
Supply air	None

Requirements	
EMC	Complying with EN 61000-6-2, EN 61000-6-3, EN 61326-1 and NAMUR Recommendation NE 21
Degree of protection	IP 66
Compliance	CE
Electrical connections	
Cable glands	Max. four, M20x1.5 or ½ NPT
Terminals	Screw terminals for 0.2 to 2.5 mm^2 wire cross-section (max. 1.5 mm^2 with the option modules)
Explosion protection	
	Refer to Table 10
Materials	
Housing and cover	Die-cast aluminum EN AC-AlSi12 (Fe) (EN AC-44300) acc. to DIN EN 1706, chromated and powder paint coated
Window	Makrolon® 2807
Cable glands	Polyamide, nickel-plated brass, stainless steel 1.4305
Other external parts	Stainless steel 1.4571 and 1.4404 (316 L)
Weight	
	1.4 to 1.6 kg (depending on version)

Table 10: *Summary of explosion protection approvals*

TROVIS SAFE 3793	Certification		Type of protection
-110	ATEX	Number BVS 16 ATEX E117	II 2 G Ex ia IIC T4/T6 Gb II 2 D Ex ia IIIC T 85 °C Db
-510	ATEX	Number BVS 16 ATEX E117	II 2 D Ex tb IIIC T 85 °C Db
-810	ATEX	Number BVS 16 ATEX E117	II 3 G Ex nA IIC T4/T6 Gc II 2 D Ex tb IIIC T 85 °C Db
-850	ATEX	Number BVS 16 ATEX E123	II 3 G Ex nA IIC T4/T6 Gc
-113	EAC	Number TC RU C-DE.PB.B.00127 Date 2018-06-28	1Ex ia IIC T4/T6 Gb X Ex ia IIIC T85°C Db X
-813	EAC	Number TC RU C-DE.PB98.B.00127 Date 2018-06-28	2Ex nA IIC T4/T6 Gc X Ex tb IIIC T85°C Db X
-111	IECEx	Number IECEx BVS 16.0084 Date 2016-12-07	Ex ia IIC T4/T6 Gb Ex ia IIIC T 85 °C Db
-511	IECEx	Number IECEx BVS 16.0084 Date 2016-12-07	Ex tb IIIC T 85 °C Db
-811	IECEx	Number IECEx BVS 16.0084 Date 2016-12-07	Ex nA IIC T4/T6 Gc Ex tb IIIC T 85 °C Db
-851	IECEx	Number IECEx BVS 16.0084 Date 2016-12-07	Ex nA IIC T4/T6 Gc
-130	FM	Number FM16CA0218X Date 2018-01-06	IS Class I, II, III, Division 1, Groups A, B, C, D, E, F, G; Type 4X NI Class I, II, III, Division 2, Groups A, B, C, D, E, F, G; Type 4X Class I, Zone 1, AEx ia IIC; Type 4X
-112	NEPSI	Number GYJ17.1245X Date 2017-11-21	Ex ia IIC T6...T4 Gb Ex iaD 21 T85
-512	NEPSI	Number GYJ17.1245X Date 2017-11-21	Ex tD A21 IP66 T85°C
-812	NEPSI	Number GYJ17.1245X Date 2017-11-21	Ex nA IIC T6...T4 Gc Ex tD A21 IP66 T85°C
-852	NEPSI	Number GYJ17.1245X Date 2017-11-21	Ex nA IIC T4...T6 Gc

Table 11: *Optional additional functions (see section 6.2 on page 72)*

Analog position transmitter		
Version	Two-wire system, galvanic isolation, reverse polarity protection, reversible direction of action	
Supply air	10 to 30 V DC	
Output signal	4 to 20 mA	
Error indication	2.4 or 21.6 mA	
No-load current	1.4 mA	
Static destruction limit	38 V DC · 30 V AC	
Software limit switches	**NAMUR**	**PLC**
Version	Galvanic isolation, reverse polarity protection, switching output acc. to EN 60947-5-6	Galvanic isolation, reverse polarity protection, binary input of a PLC acc. to EN 61131-2, P_{max} = 400 mW
Signal state: Non-conducting	≤1.0 mA	Non-conducting
Signal state: Conductive	≥2.2 mA	Conductive (R = 348 Ω)
Static destruction limit	32 V DC/24 V AC	16 V DC/50 mA
Binary output	**NAMUR**	**PLC**
Version	Galvanic isolation, reverse polarity protection, switching output acc. to EN 60947-5-6	Galvanic isolation, reverse polarity protection, binary input of a PLC acc. to EN 61131-2, P_{max} = 400 mW
Signal state: Non-conducting	≤1.0 mA	Blocked
Signal state: Conductive	≥2.2 mA	Conductive (R = 348 Ω)
Static destruction limit	32 V DC/24 V AC	16 V DC/50 mA
Binary input		
Version	Galvanic isolation, reverse polarity protection	
Voltage input	0 to 24 V DC	
Input resistance	≥7 kΩ	
ON switching state	Ue >15 V	
OFF switching state	Ue <11 V	
Static destruction limit	38 V DC/30 V AC	

Forced venting		
Version		Galvanic isolation, reverse polarity protection
Voltage input		0 to 24 V DC
Input resistance		≥7 kΩ
Signal state	Active	Ue <11 V
	Not active	Ue >15 V
Static destruction limit		38 V DC/30 V AC
Inductive limit switches		
Version		For connection to switching amplifier according to EN 60947-5-6, SJ2-SN proximity switches, reverse polarity protection
Measuring plate not detected		≥3 mA
Measuring plate detected		≤1 mA
Static destruction limit		20 V DC
Permissible ambient temperature		–50 to +85 °C
Mechanical limit switches		
Floating contact		NC contact/NO contact
Static destruction limit		38 V DC · 30 V AC · 0.2 A
Permissible ambient temperature		–40 to +85 °C

Table 12: *Pressure sensors*

Pressure sensors	
Pressure range	0 to 14 bar
Permissible ambient temperature	–40 to +85 °C

3.8 Dimensions in mm

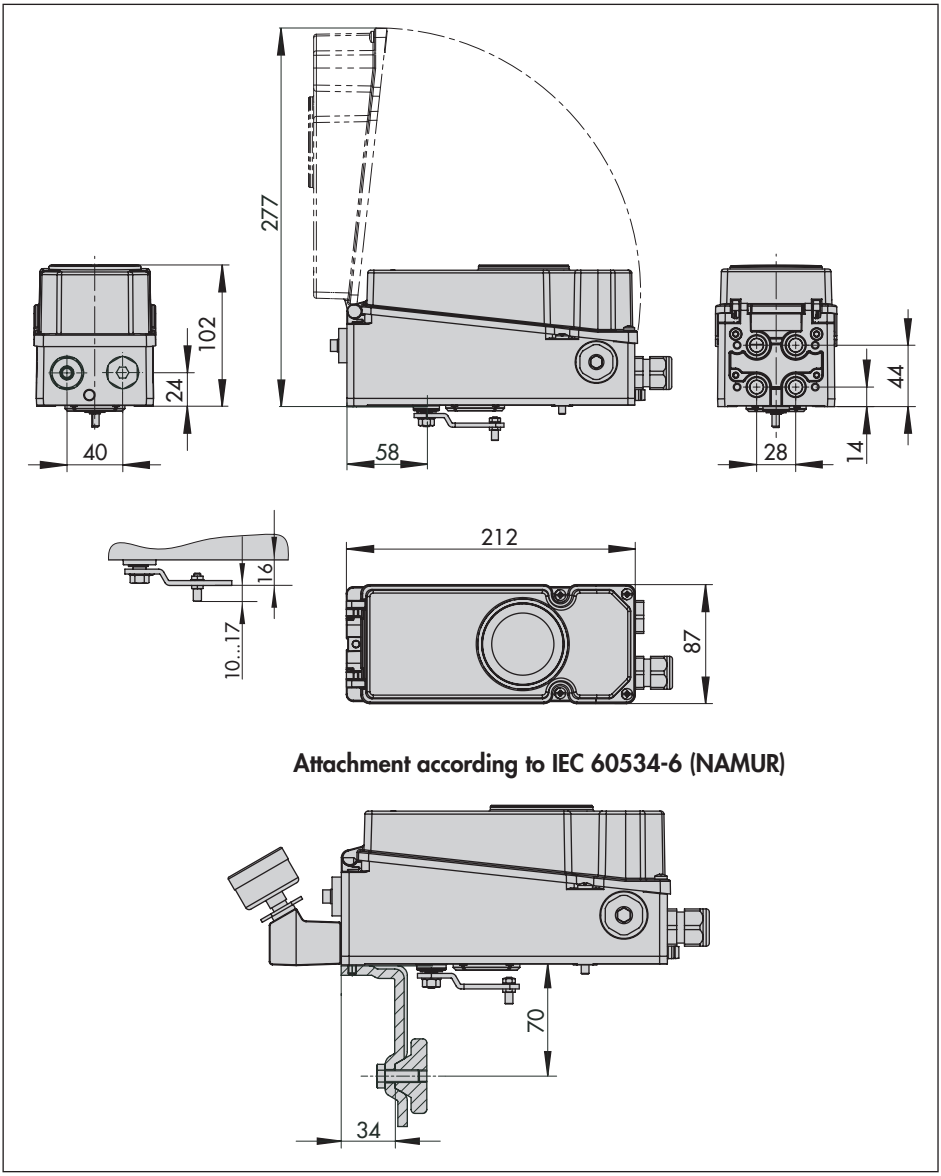

Pressure gauge bracket, two pressure gauges

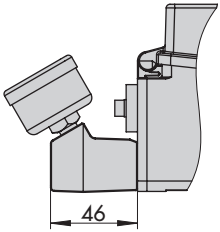

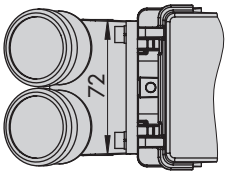

Pressure gauge bracket, three pressure gauges

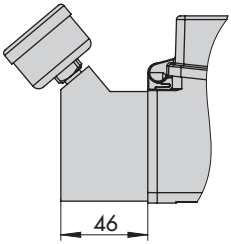

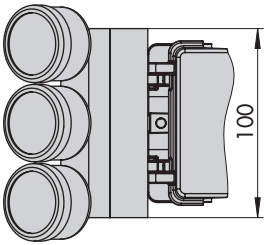

Connecting plate

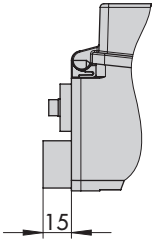

Attachment according to VDI/ VDE 3847 onto Type 3277 Actuator

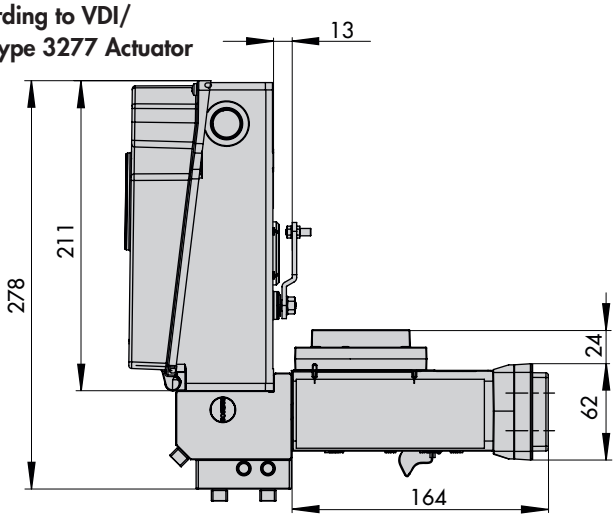

Attachment according to VDI/ VDE 3847 to a NAMUR rib

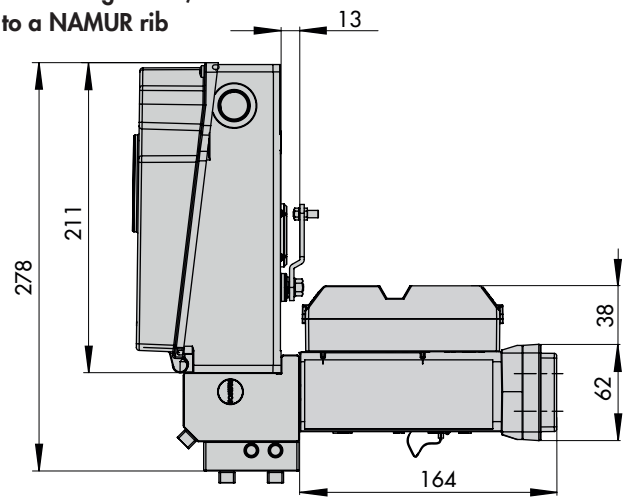

Attachment to rotary actuators according to VDI/VDE 3845
Fixing level 1, AA1 to AA4 size, see section 3.9

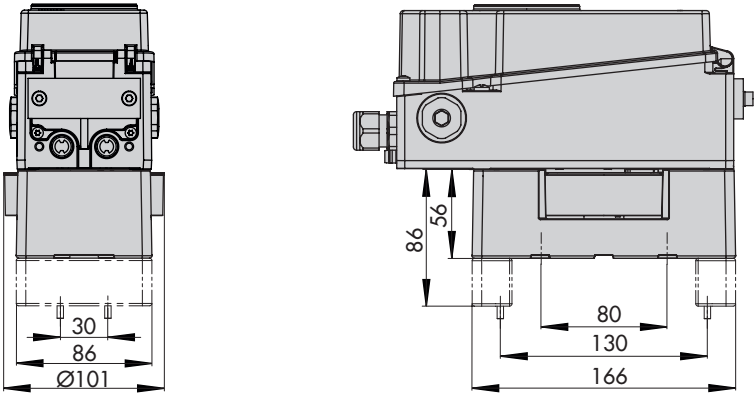

Lever

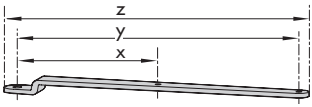

Lever	x	y	z
M	25 mm	50 mm	66 mm
L	70 mm	100 mm	116 mm
XL	100 mm	200 mm	216 mm
XXL	200 mm	300 mm	316 mm

3.9 Fixing levels according to VDI/VDE 3845 (September 2010)

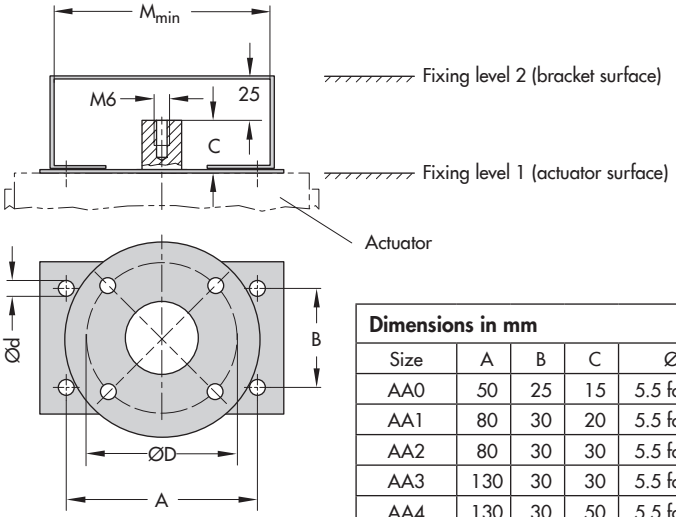

Dimensions in mm						
Size	A	B	C	Ød	M_{min}	D[1)]
AA0	50	25	15	5.5 for M5	66	50
AA1	80	30	20	5.5 for M5	96	50
AA2	80	30	30	5.5 for M5	96	50
AA3	130	30	30	5.5 for M5	146	50
AA4	130	30	50	5.5 for M5	146	50
AA5	200	50	80	6.5 for M6	220	50

1) Flange type F05 acc. to DIN EN ISO 5211

4 Measures for preparation

After receiving the shipment, proceed as follows:

1. Check the scope of delivery. Compare the shipment received with the delivery note.
2. Check the shipment for transportation damage. Report any transportation damage.

4.1 Unpacking

NOTICE

Risk of positioner damage due to foreign particles entering it.
Do not remove the packaging and protective film/protective caps until immediately before mounting and start-up.

1. Remove the packaging from the positioner.
2. Dispose of the packaging in accordance with the valid regulations.

4.2 Transporting

- Protect the positioner against external influences (e.g. impact).
- Protect the positioner against moisture and dirt.
- Observe transport temperature depending on the permissible ambient temperature (see technical data in section 3.7).

4.3 Storage

NOTICE

Risk of positioner damage due to improper storage.
– Observe the storage instructions.
– Avoid long storage times.
– Contact SAMSON in case of different storage conditions or long storage periods.

Storage instructions

- Protect the positioner against external influences (e.g. impact, shocks, vibration).
- Do not damage the corrosion protection (coating).
- Protect the positioner against moisture and dirt. In damp spaces, prevent condensation. If necessary, use a drying agent or heating.
- Observe storage temperature depending on the permissible ambient temperature (see technical data in section 3.7).
- Store positioner with closed cover.
- Seal pneumatic and electrical connections.

5 Mounting and start-up

NOTICE

Risk of malfunction due to incorrect sequence of mounting, installation and start-up. Observe the prescribed sequence.

➔ Sequence:

1. **Remove the protective caps from the pneumatic connections.**
2. **Mount the positioner on the valve.**
   ➔ Section 5.3 onwards
3. **Perform pneumatic installation.**
   ➔ Section 5.8 onwards
4. **Perform electrical installation.**
   ➔ Section 5.10 onwards
5. **Perform settings.**
   ➔ Section 8 onwards

5.1 Mounting position

NOTICE

Risk of damage to the positioner due to incorrect mounting position.
– Do not mount the positioner with the back of the device facing upward.
– Do not seal or restrict the vent opening when the device is installed on site.

➔ Observe mounting position (see Fig. 6).

➔ Do not seal or restrict the vent opening (see Fig. 5) when the device is installed on site.

5.2 Lever and pin position

The positioner is adapted to the actuator and to the rated travel by the lever on the back of the positioner and the pin inserted into the lever.

The travel tables on page 29 show the maximum adjustment range at the positioner. The travel that can be implemented at the valve is additionally restricted by the selected fail-safe position and the required compression of the actuator springs.

The positioner is equipped with the M lever (pin position 50) as standard (see Fig. 7).

Note

*The **M** lever is included in the scope of delivery.*
***L, XL, XXL** levers for attachment according to IEC 60534-6 (NAMUR) are available as accessories (see Table 3 on page 26).*

If a pin position other than position **50** with the standard **M** lever is required or an **L** or **XL** lever size is required, proceed as follows (see Fig. 8):

1. Remove the follower pin (2) from its pin position and move it to the hole for the recommended pin position (according to travel tables on page 29) and screw tight. Only use the longer follower pin included in the mounting kit.
2. Place the lever (1) on the shaft of the positioner and fasten it tight using the disk spring (1.2) and nut (1.1).

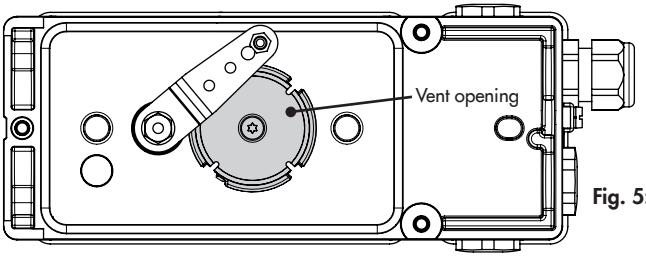

Fig. 5: *Vent opening (back of the positioner)*

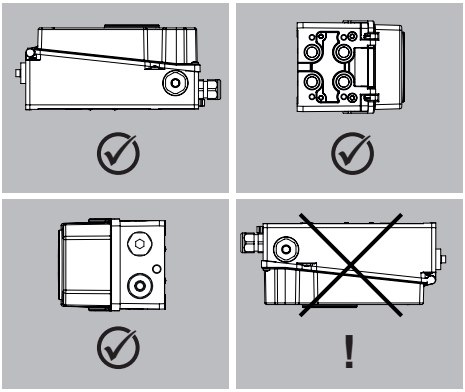

Fig. 6: *Permissible mounting positions*

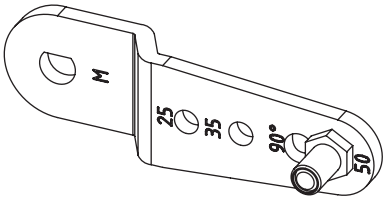

Fig. 7: *M lever with pin position 50*

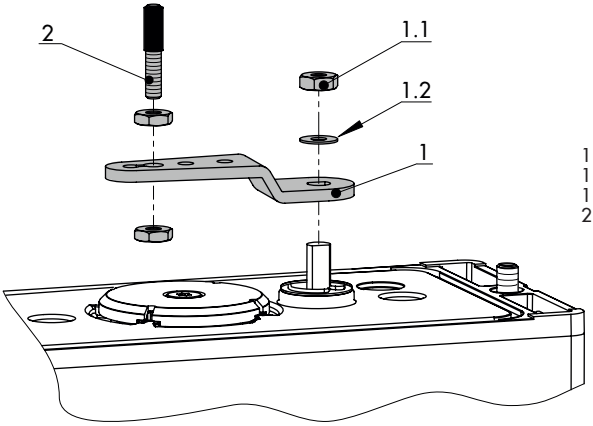

1	Lever
1.1	Nut
1.2	Disk spring
2	Follower pin

Fig. 8: *Mounting the lever and follower pin*

5.3 Type 3277 Actuator

➔ Actuators with 240 to 750 cm² (Fig. 9)

➔ Required mounting parts and accessories: Table 2 on page 25.

➔ *Observe travel tables on page 29.*

1. Place follower clamp (3) on the actuator stem, align it and screw tight so that the mounting screw is located in the groove of the actuator stem.
2. Mount cover plate (10) with narrow side of the cut-out pointing towards the signal pressure connection. Make sure that the glued-on flat gasket (14) points towards the actuator yoke.
3. Check the pin position of the follower pin (2) on M lever (1). Refer to travel tables for type of attachment. If necessary, change the pin position (see section 5.2).
4. Insert molded seal (15) into the groove of the positioner housing.
5. Turn the lever counterclockwise until the spring force can be felt (position 1). Continue to turn the lever further to position 2 (see Fig. 9, bottom right).
6. Press the shaft lock (see Fig. 9, bottom left) to hold the lever in position 2.

➔ If limit switches are installed, read section 6.3.2.

7. Place positioner on the cover plate in such a manner that the follower pin (2) rests on the top of the follower clamp (3). The lever (1) must rest on the follower clamp with spring force.
   Fasten the positioner on the cover plate (10) using the three fastening screws.
8. Make sure that the tip of the gasket (16) projecting from the side of the connection block is positioned to match the actuator symbol for the actuator's fail-safe action "actuator stem extends" or "actuator stem retracts". If this is not the case, unscrew the three fastening screws and lift off the cover. Turn the gasket (16) by 180° and re-insert it.
9. Place the connection block (12) with the associated seals against the positioner and the actuator yoke and fasten using the screw (12.1). For actuators with fail-safe action "actuator stem retracts", additionally remove the blanking plug (12.2) and mount the external signal pressure pipe.
10. Mount cover (11) on the other side. Make sure that the vent plug is located at the bottom when the control valve is installed to allow any condensed water that collects to drain off.

➔ The ports 238 and 79 must be sealed with the dummy plate (see section 5.8).

i Note

This type of attachment is not recommended when two pneumatic modules are used as the connection block reduces the K_V coefficient (see section 6.1).

i Note

– *If two pneumatic modules are required, perform pneumatic connections as described for attachment according to IEC 60534-6 (see section 5.4).*

1 Lever
1.1 Nut
1.2 Disk spring
2 Follower pin
3 Follower clamp
10 Cover plate
11 Cover
11.1 Vent plug
12 Connection block
12.1 Screw
12.2 Blanking plug or connection for external piping
14 Gasket
15 Molded seal
16 Seal

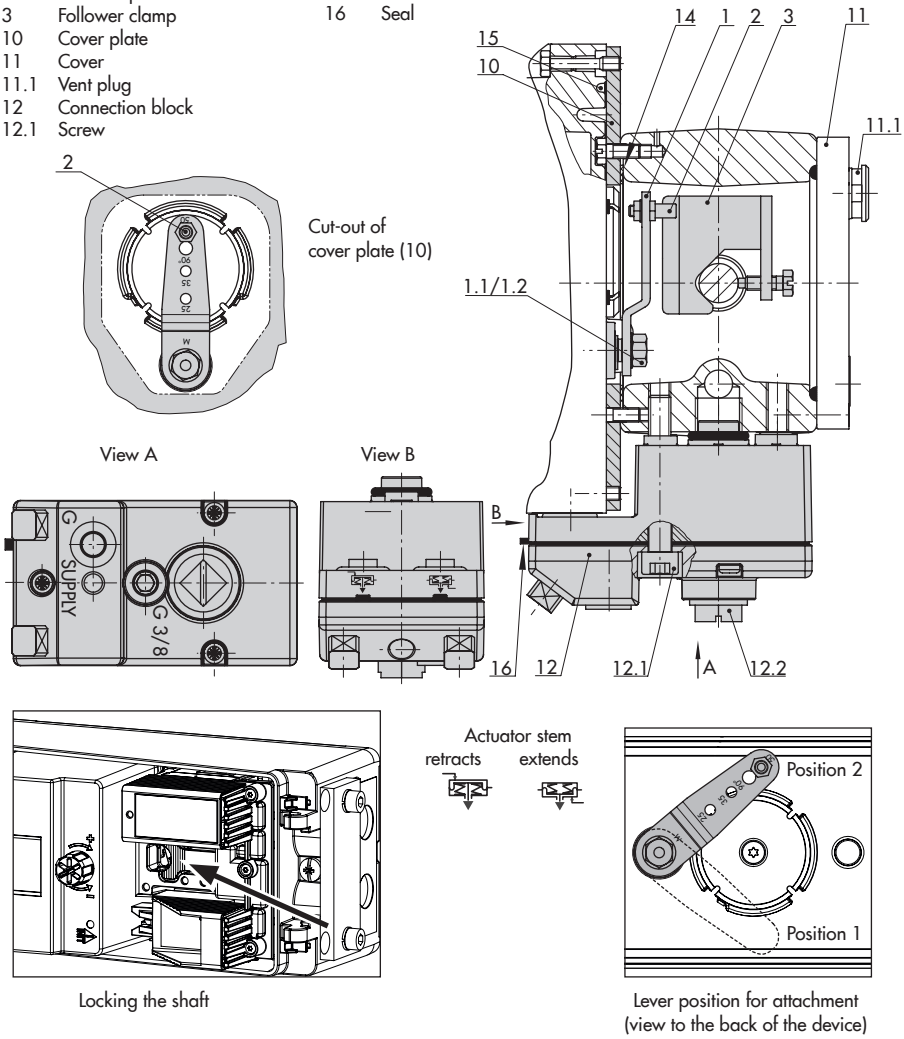

Locking the shaft

Lever position for attachment (view to the back of the device)

Fig. 9: *Direct attachment to Type 3277 Actuator (240, 350, 355 and 750 cm²)*

– *When two pneumatic modules are used, fit an additional exhaust port 79 and seal port 238 (see section 5.8).*
– *Accessories: see Table 1 on page 24.*

5.4 Attachment according to IEC 60534-6

➔ Refer to Fig. 10

➔ Required mounting parts and accessories: Table 3 on page 26.

➔ *Observe travel tables on page 29.*

1. Screw the two bolts (14) to the bracket (9.1) of the stem connector (9), place the follower plate (3) on top and use the screws (14.1) for fastening.

   Actuator sizes 2800 cm² and 1400 cm² with 120 mm travel:
   – For a travel of 60 mm or smaller, screw the longer follower plate (3.1) directly to the stem connector (9).
   – For a travel exceeding 60 mm, mount the bracket (16) first and then the follower plate (3) to the bracket together with the bolts (14) and screws (14.1).

2. Mount the NAMUR bracket (10):
   – For **attachment to the NAMUR rib**, use an M8 screw (11) and toothed lock washer directly in the yoke hole.
   – For attachment to **valves with rod-type yokes**, use two U-bolts (15) around the yoke. Align the NAMUR bracket (10) according to the embossed scale so that the follower plate (3) is shifted by half the angle range to the NAMUR bracket (the slot of the follower plate is centrally aligned with the NAMUR bracket at mid valve travel).

3. Mount connecting plate (6) or pressure gauge bracket (7) with pressure gauges on the positioner, making sure the two seals (6.1) are seated properly.

4. Select required lever (1) **M**, **L** or **XL** and pin position according to the actuator size and valve travel (see travel tables on page 29 and section 5.2).

5. Place positioner on the NAMUR bracket in such a manner that the follower pin (2) rests in the slot of the follower plate (3, 3.1). Adjust the lever (1) correspondingly.
   Screw the positioner to the NAMUR bracket using the three fastening screws.

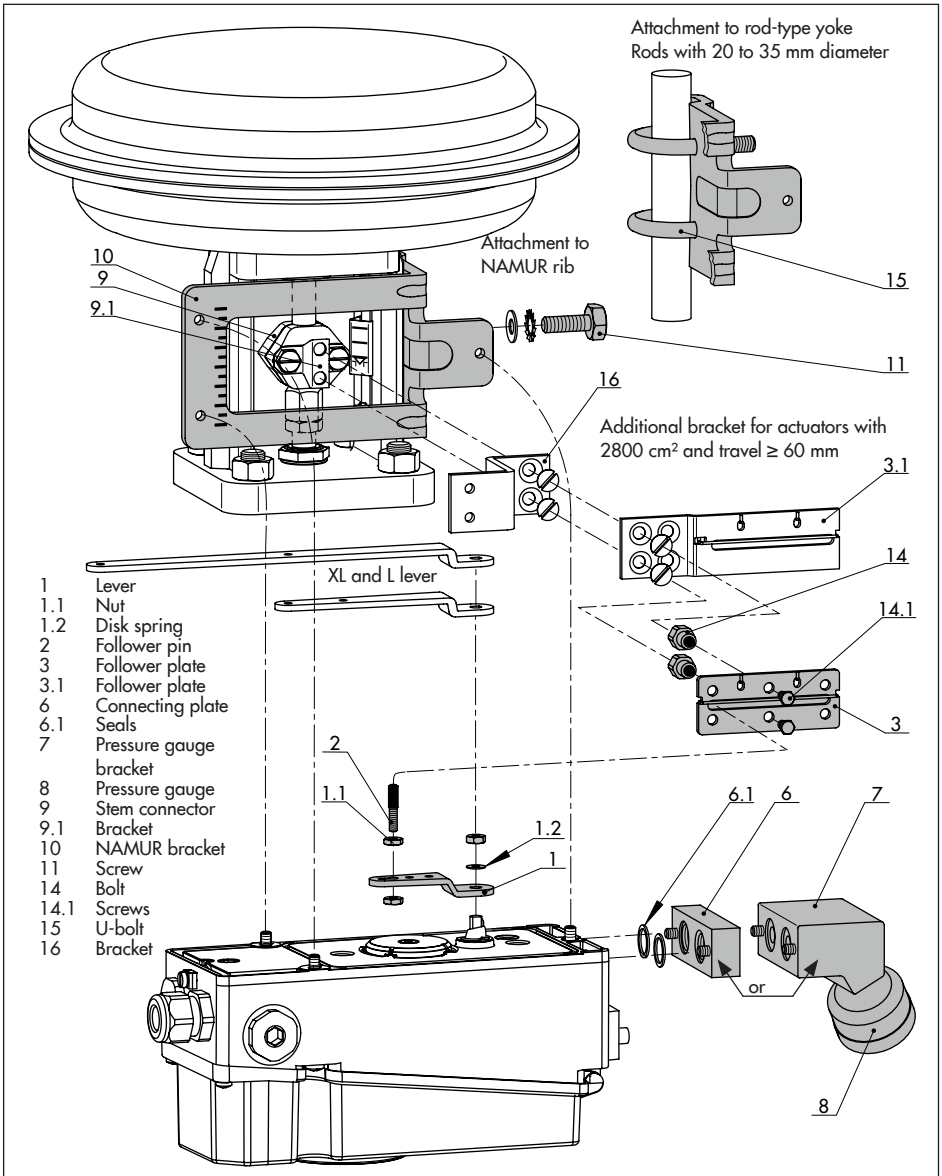

Fig. 10: *Attachment according to IEC 60534-6 (NAMUR)*

5.5 Rotary actuators (heavy-duty version)

➔ Refer to Fig. 12

NOTICE

Risk of positioner damage due to incorrect direction of rotation of the rotary actuator. Observe the actuator's direction of rotation on attaching the positioner as described below.

➔ Required mounting parts and accessories: Table 5 on page 28.

➔ Prepare actuator and mount possibly required adapter supplied by the actuator manufacturer.

1. Mount the housing (10) onto the rotary actuator. In case of VDI/VDE attachment, place spacers (11) underneath, if necessary.
   Details and dimensions for the fixing levels with VDI/VDE 3845 can be found in section 3.9 on page 40.
2. For **SAMSON Type 3278 and VETEC S160 Rotary Actuators**, fasten the adapter (5) onto the free end of the shaft and for **VETEC R Actuator**, place on the adapter (5.1). For **Type 3278, VETEC S160** and **VETEC R Actuators**, place on the adapter (3). For **Type 3278, VETEC S160** and **VETEC R** Actuators, place on the adapter (3). For VDI/VDE version, this step depends on the actuator size.
3. Stick adhesive label (4.3) onto the coupling wheel in such a manner that the yellow part of the sticker is visible in the window of the housing when the valve is OPEN (adhesive labels with explanatory symbols are enclosed and can be stuck on the housing, if required).
4. Fasten coupling wheel (4) on the slotted actuator shaft or adapter (3) using screw (4.1) and disk spring (4.2).
5. Unscrew the standard follower pin (2) from the positioner's M lever (1).
   Attach the follower pin (Ø5 mm) included in the mounting kit to pin position 90°.
6. Place positioner on housing (10) and screw it tight. Taking the actuator's direction of rotation into account, adjust lever (1) so that it engages in the correct slot with its follower pin (see Fig. 11).

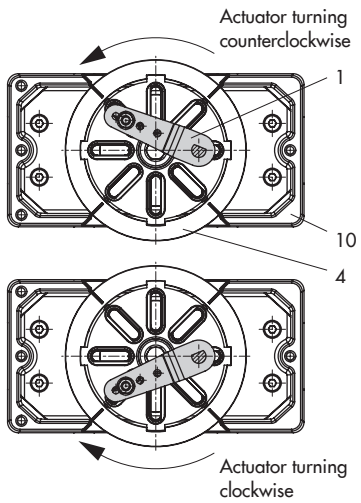

Fig. 11: *Direction of rotation*

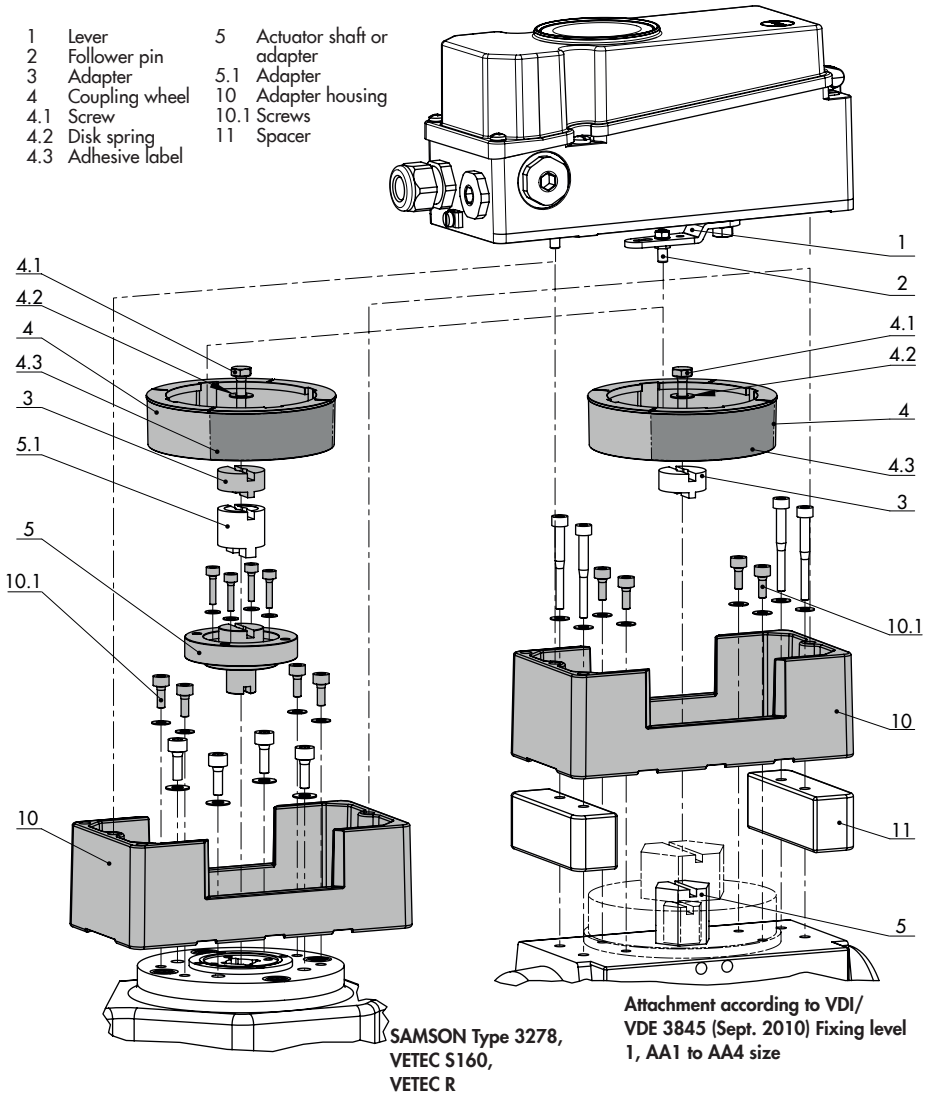

Fig. 12: *Attachment to rotary actuators (heavy-duty version)*

5.6 Air purging function for single-acting actuators

The instrument air leaving the positioner is diverted to the actuator spring chamber to provide corrosion protection inside the actuator.

5.6.1 Direct attachment to Type 3277, 240 to 750 cm²

Direction of action: actuator stem extends

Remove the blanking plug (12.2, Fig. 9 on page 45) at the connection block and make a pneumatic connection to the spring chamber on the vented side.

Tip

The corresponding pipe fittings to establish the air connections are listed in Table 2 on page 25.

➔ If an obsolete connection block that is no longer available is used (order no. 1400-8811 or 1400-8812), read the attachment instructions described in section 5.6.2.

"Actuator stem retracts" direction of action:

The air purging function is automatically provided.

5.6.2 Attachment according to IEC 60534-6 (NAMUR rib or attachment to rod-type yokes) and to rotary actuators

1. Mount the connecting plate and connect port 79 to the actuator's spring chamber.
2. Seal port 238 in single-acting actuators.

Should other valve accessories be used which vent the actuator (e.g. solenoid valve, volume booster, quick exhaust valve), this exhaust air must also be included in the purging function. The connection at the positioner must be protected with a check valve (e.g. check valve G ¼, order no. 8502-0597) mounted in the piping. Otherwise the pressure in the positioner housing would rise above the ambient pressure and damage the positioner when the exhausting components respond suddenly.

5.7 Attachment according to VDI/VDE 3847

Attachment according to VDI/VDE 3847 allows the positioner to be replaced quickly while the process is running by blocking the air in the actuator.

Note

This type of attachment is not recommended when two pneumatic modules are used as the connection block reduces the K_V coefficient (see section 6.1).

Note

If the top pneumatic connections of the positioner are sealed with the dummy plate, it must be unfastened before attaching the positioner.
Details on the pneumatic connections: see section 5.8.

Note

The adapter bracket (1402-0257) for Series 3730 Positioners can also be used for mounting the TROVIS SAFE 3793 Positioner according to VDI/VDE 3847 with the following restrictions:
- *Air purging of the actuator's spring chamber is not possible.*
- *Only single-acting function can be implemented.*
- *The top ports (238 and 79, see section 5.8) must be sealed with the dummy plate.*

Tip

To monitor the supply air and signal pressure, we recommend mounting pressure gauges (see accessories in section 3.5).

Procedure to block the actuator in place (see Fig. 13):

1. Unscrew the red retaining screw (20).
2. Turn the air blocker (19) on the bottom of the adapter block according to the inscription.

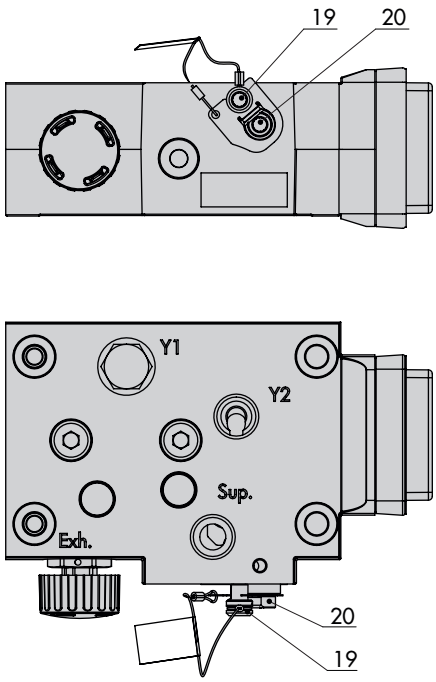

Fig. 13: *Adapter block for attachment according to VDI/VDE 3847*

5.7.1 Preparing the positioner for attachment

1. Unfasten the turnboard (7) from the adapter bracket (6).
2. Place the adapter bracket (6) on the positioner and mount using the screws (6.1).

➔ **Make sure that the O-rings (9) are correctly seated.**

3. Fasten the turnboard (7) to the adapter bracket (6). Select the required switching function from Fig. 14 by turning the turnboard.

➔ **Make sure that the O-rings are correctly seated.**

➔ An arrow on the turnboard points to the corresponding switching function:
   – Double acting (left)
   – Single acting (middle)
   – Reverse acting (right)

4. Insert the molded seal (6.2) in the groove of the adapter bracket (6).
5. Select required lever (1) **M**, **L** or **XL** and pin position according to the actuator size and valve travel (see travel tables on page 29 and section 5.2).

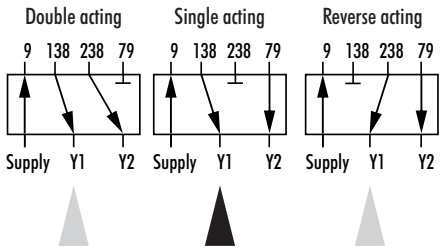

Fig. 14: *Label on the adapter bracket*

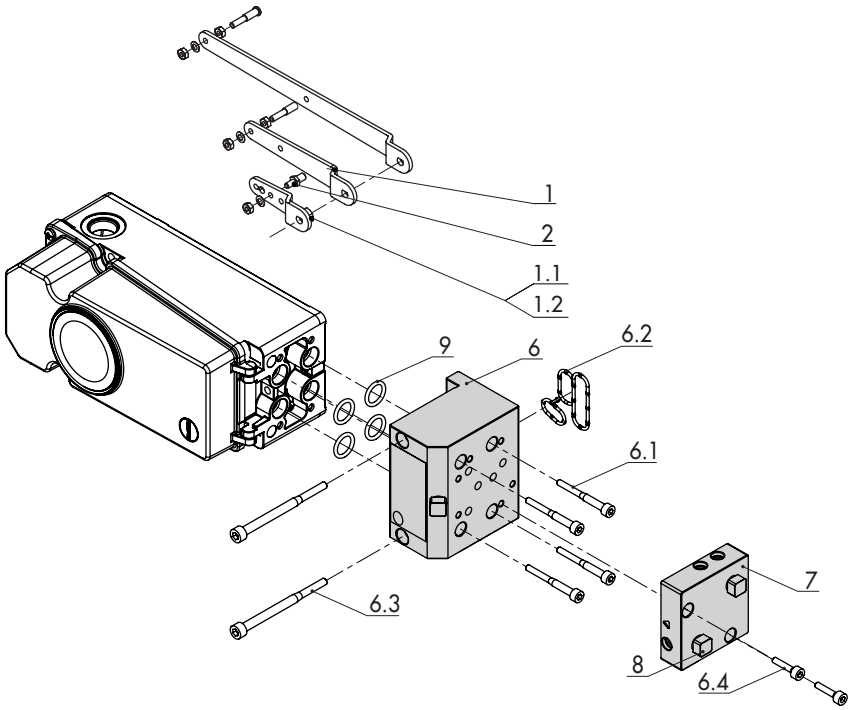

1	Lever
1.1	Nut
1.2	Disk spring
2	Follower pin
6	Adapter bracket
6.1	Screws
6.2	Molded seal
6.3	Screws
6.4	Screws
7	Turnboard
8	Blanking plugs
9	O-rings

Fig. 15: *Mounting the adapter bracket on the positioner*

5.7.2 Mounting on Type 3277 Actuator

➔ Required mounting parts and accessories: Table 4 on page 27.

Mount the positioner on the yoke as shown in Fig. 16. The signal pressure is routed to the actuator over the connecting plate (12), for actuators with fail-safe action "actuator stem extends" internally through a bore in the valve yoke and for "actuator stem retracts" through external piping.

Only the Y1 port is required for positioner attachment. The Y2 port can be used for air purging of the spring chamber.

1. Place follower clamp (3) on the actuator stem, align it and screw tight so that the mounting screw is located in the groove of the actuator stem.
2. Insert the molded seal (17.1) into the turnboard (17) and mount the turnboard to the adapter block (13) using the screws (17.2).
3. Mount the blank plate (18) to the turnboard (17) using the screws (18.1). Make sure that the seals are correctly seated.

i Note

A solenoid valve can also be mounted in place of the blank plate (18). The orientation of the turnboard (17) determines the mounting position of the solenoid valve. Alternatively, a restrictor plate can be mounted (▶ AB 11).

4. Insert the screws (13.1) through the middle holes of the adapter block (13).
5. Place the connecting plate (12) together with the seal (12.1) onto the screws (13.1) corresponding to the fail-safe action "actuator stem extends" or "actuator stem retracts". The fail-safe action that applies is determined by aligning the groove of the adapter block (13) with the groove of the connecting plate (12).
6. Mount the adapter block (13) together with the connecting plate (12) to the actuator using the screws (13.1).
7. Insert the vent plug (11.1) into the **Exh.** connection.
8. For fail-safe action "actuator stem extends", seal the Y1 port with a blanking plug.

   For fail-safe action "actuator stem retracts", connect the Y1 port to the signal pressure connection of the actuator.
9. Press the shaft lock of the positioner prepared as described in section 5.7.1 (see Fig. 9, bottom left) and hold the lever in position 2.
10. Place positioner in such a manner that the follower pin (2) rests on the top of the follower clamp (3). The lever (1) must rest on the follower clamp with spring force.
11. Fasten the positioner to the adapter block (13) using the two fastening screws (6.3). Make sure the molded seal (6.2) is properly seated (see Fig. 15).
12. Mount cover (11) on the other side. Make sure that the vent plug is located at the bottom when the control valve is in-

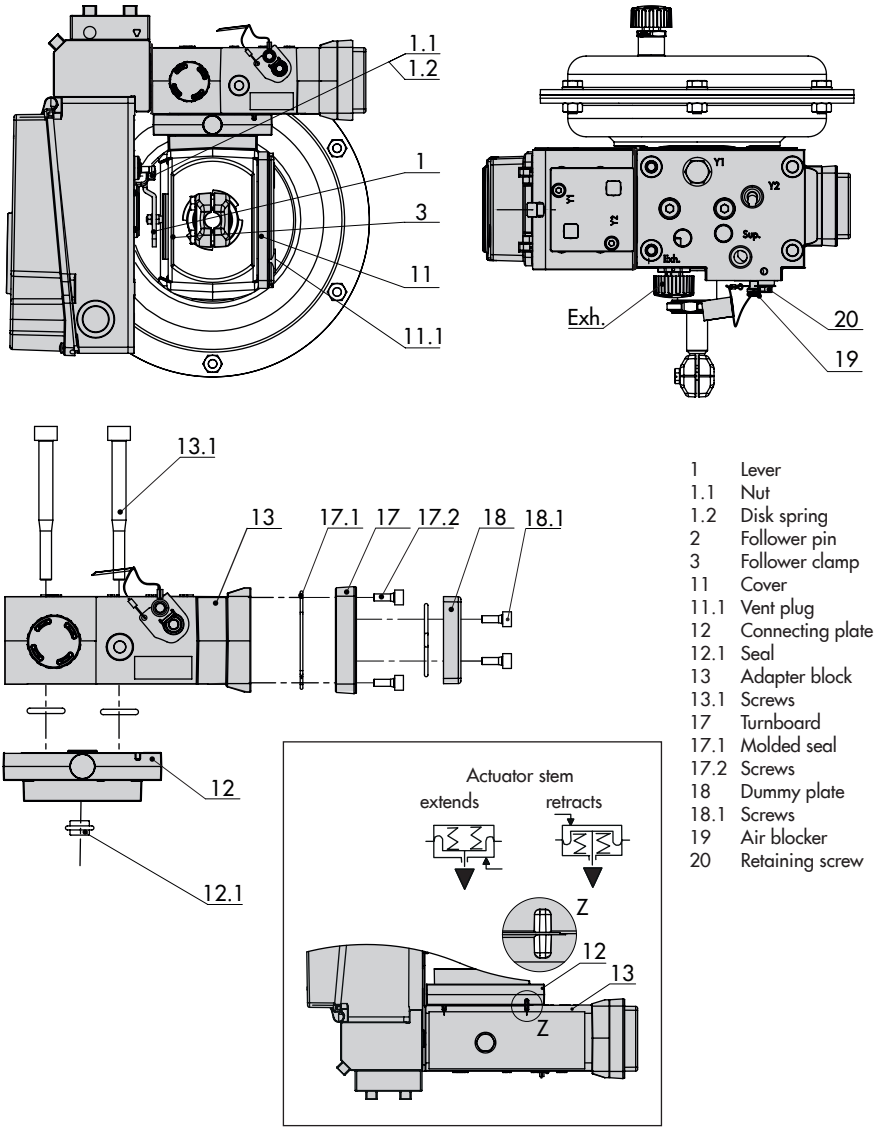

1	Lever
1.1	Nut
1.2	Disk spring
2	Follower pin
3	Follower clamp
11	Cover
11.1	Vent plug
12	Connecting plate
12.1	Seal
13	Adapter block
13.1	Screws
17	Turnboard
17.1	Molded seal
17.2	Screws
18	Dummy plate
18.1	Screws
19	Air blocker
20	Retaining screw

Fig. 16: *Attachment to Type 3277 Actuator according to VDI/VDE 3847*

stalled to allow any condensed water that collects to drain off.

5.7.3 Attachment according to IEC 60534-6 (NAMUR)

➔ Required mounting parts and accessories: Table 4 on page 27.

➔ *Observe travel tables on page 29.*

1. **Series 240 Valves, actuator size up to 1400-60 cm²:** Screw the two bolts (14) to the bracket of the stem connector or directly to the stem connector (depending on the version), place the follower plate (3) on top and use the screws (14.1) to fasten it.

   Type 3251 Valve, 350 to 2800 cm²: Screw the longer follower plate (3.1) to the bracket of the stem connector or directly to the stem connector (depending on the version).

   Type 3254 Valve, 1400-120 to 2800 cm²: Screw the two bolts (14) to the bracket (16). Fasten the bracket (16) onto the stem connector, place the follower plate (3) on top and use the screws (14.1) to fasten it.

2. For **attachment to the NAMUR rib**, fasten the NAMUR connection block (10) directly into the existing yoke bore using the screw and toothed lock washer (11). Align the marking on the NAMUR valve connection (on the side marked '1') to 50 % travel.

   For attachment to **valves with rod-type yokes** using the formed plate (15), which is placed around the yoke: screw the four studs into the NAMUR connection block (10). Place the NAMUR connection block on the rod and position the formed plate (15) on the opposite side. Use the nuts and toothed lock washers to fasten the formed plate onto the studs. Align the marking on the NAMUR valve connection (on the side marked '1') to 50 % travel.

3. Insert the molded seal (17.1) into the turnboard (17) and mount the turnboard to the adapter block (13) using the screws (17.2).

4. Mount the blank plate (18) to the turnboard using the screws (18.1). Make sure that the seals are correctly seated.

i Note

A solenoid valve can also be mounted in place of the blank plate (18). The orientation of the turnboard (17) determines the mounting position of the solenoid valve. Alternatively, a restrictor plate can be mounted (▶ AB 11).

5. Fasten the adapter block (13) to the NAMUR connection block using the screws (13.1).

6. Insert the vent plug into the Exh. connection.

7. Place the positioner on the adapter block (13) in such a manner that the follower pin (2) rests on the top of the follower plate (3, 3.1). Adjust the lever (1) correspondingly.

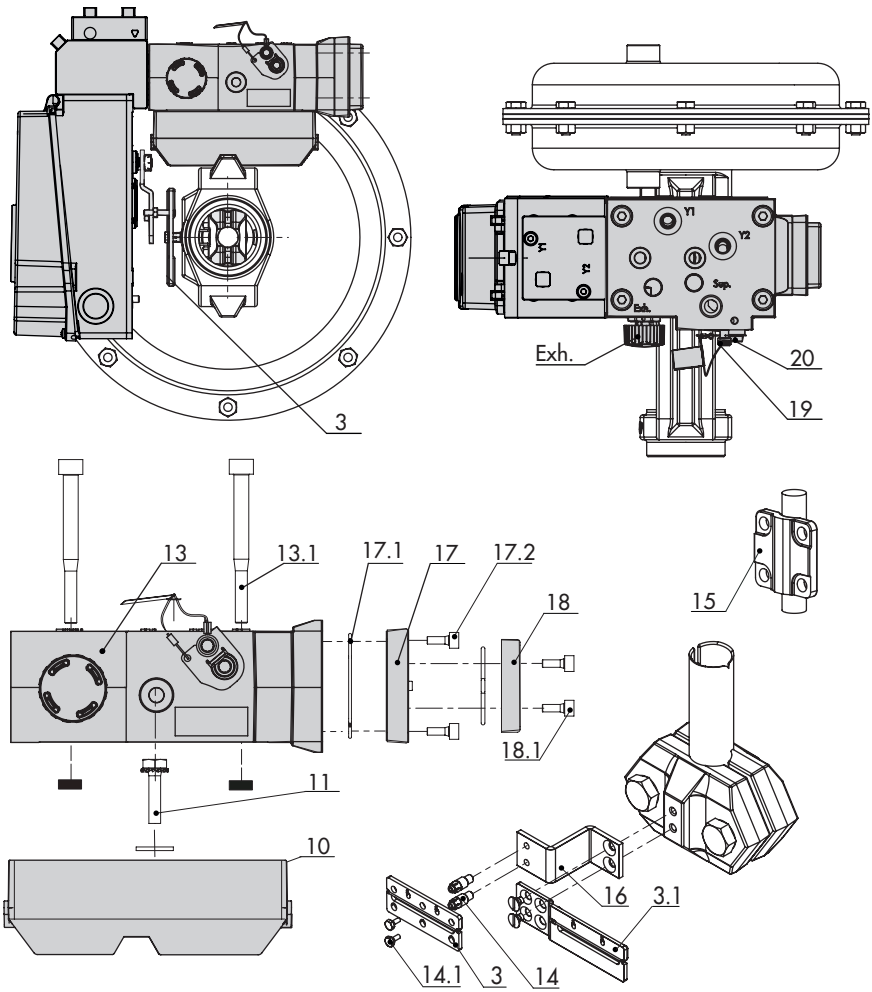

2	Follower pin	13	Adapter block	17	Turnboard
3	Follower plate	13.1	Screws	17.1	Molded seal
3.1	Follower plate	14	Bolt	17.2	Screws
10	NAMUR connection block	14.1	Screws	18	Dummy plate
11	Screw with toothed lock washer	15	Formed plate	18.1	Screws
		16	Bracket	19	Air blocker
				20	Retaining screw

Fig. 17: *Attachment according to IEC 60534-6 (NAMUR) and VDI/VDE 3847*

8. Select required lever (1) **M**, **L** or **XL** and pin position according to the actuator size and valve travel (see travel tables on page 29 and section 5.2).
9. Fasten the positioner to the adapter block (13) using the two fastening screws (6.3). Make sure the molded seal (6.2) is properly seated.
10. For **single-acting actuators without air purging**, connect the Y1 port of the adapter block to the signal pressure connection of the actuator. Seal the Y2 port with a blanking plug.

    For **double-acting actuators and actuators with air purging**, connect the Y2 port of the adapter block to the signal pressure connection of the second actuator chamber or spring chamber of the actuator. Seal the Exh. connection in the adapter block with a blanking plug.

5.8 Pneumatic connections

⚠ WARNING

Risk of injury by possible movement of exposed parts (positioner, actuator or valve) after connecting the signal pressure.
Do not touch or block exposed moving parts.

! NOTICE

Incorrect connection of the supply air will damage the positioner and will lead to malfunction.
Screw the screw fittings into the connecting plate, pressure gauge mounting block or connection block from the accessories.

The four pneumatic ports are located on the back of the positioner (see Fig. 18).

The availability of the Outputs 138 and 238 depends on the pneumatic module combination (see section 6.1).

➔ Seal Output 238 and Exhaust 79 with a dummy plate (see Fig. 19) if only one pneumatic output is available.

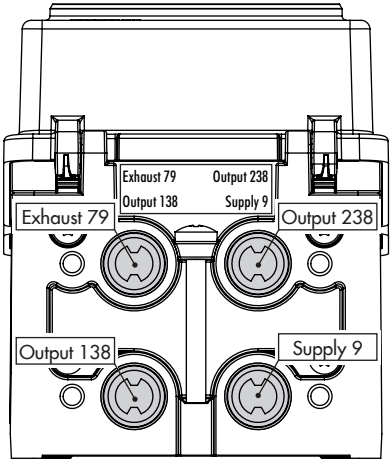

Fig. 18: *Pneumatic connections*

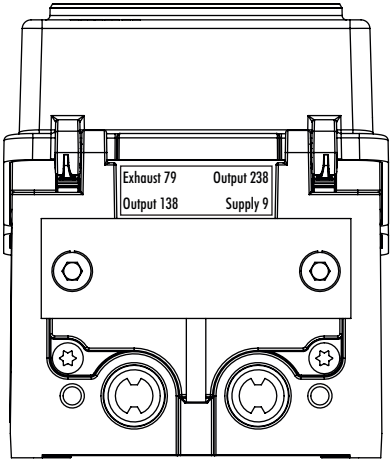

Fig. 19: *Output 238 and Exhaust 79 sealed with dummy plate*

Note

*If **one** pneumatic module is used, the entire air passage (screw fitting, pipe, mounting plate etc.) must have a minimum inside diameter of 5.9 mm.*
*When **two** pneumatic modules are used, the entire air passage (screw fitting, pipe, mounting plate etc.) must have a minimum inside diameter of 7 mm.*
We recommend using a larger inside diameter as the air capacity is further reduced by any turns and kinks in the air passage.

NOTICE

Risk of malfunction due to failure to comply with required air quality.
Only use supply air that is dry and free of oil and dust.
Read the maintenance instructions for upstream pressure reducing stations.
Blow through all air pipes and hoses thoroughly before connecting them.

5.9 Connecting the supply air

NOTICE

Risk of malfunction due to incorrect sequence of mounting, installation and start-up.
Observe the following sequence.

1. *Remove the protective caps from the pneumatic connections.*
2. *Mount the positioner on the valve.*
3. *Connect the supply air.*
4. *Connect the electrical power.*
5. *Perform settings.*

The pneumatic connections in the connecting plate, pressure gauge mounting block and connection block are optionally designed as a bore with ¼ NPT or G ¼ thread. Customary fittings for metal or copper tubing or plastic hoses can be used.

➔ Read instructions in section 5.8.

5.9.1 Signal pressure connection

The signal pressure connection depends on how the positioner is mounted onto the actuator:

Type 3277 Actuator

➔ The signal pressure connection is fixed.

Attachment according to IEC 60534-6 (NAMUR)

➔ For "actuator stem retracts" fail-safe action: connect the signal pressure to the connection on the bottom of the actuator.

➔ For "actuator stem extends" fail-safe action: connect the signal pressure to the connection on top of the actuator.

Rotary actuators (heavy-duty version)

➔ For rotary actuators, the manufacturer's specifications for connection apply.

5.9.2 Signal pressure gauges

Tip

*To monitor the supply air and signal pressure, we recommend mounting pressure gauges (*see accessories in section 3.5*).*

Mounting the pressure gauges:

➔ See sections 5.4 and Fig. 10

5.9.3 Supply pressure

The required supply air pressure depends on the bench range and the actuator's direction of action (fail-safe action).

The bench range is written on the nameplate either as the bench range or signal pressure range depending on the actuator. The direction of action is marked FA or FE or by a symbol.

Actuator stem extends FA (AIR TO OPEN)

Fail-close (for globe and angle valves):

➔ Required supply pressure = Upper bench range value + 0.2 bar, at least 2.5 bar.

Actuator stem retracts FE (AIR TO CLOSE)

Fail-open (for globe and angle valves):

For tight-closing valves, the maximum signal pressure pst_{max} is roughly estimated as follows:

$$pst_{max} = F + \frac{d^2 \cdot \pi \cdot \Delta p}{4 \cdot A} \text{ [bar]}$$

d = Seat diameter [cm]
Δp = Differential pressure across the valve [bar]
A = Actuator area [cm^2]
F = Upper bench range value of the actuator [bar]

If there are no specifications, calculate as follows:

➔ Required supply pressure = Upper bench range value + 1 bar, at least 2.5 bar.

5.10 Electrical connections

⚠ DANGER

Risk of fatal injury due to the formation of an explosive atmosphere.

For installation in hazardous areas, observe the relevant standards that apply in the country of use.

Standard applicable in Germany: EN 60079-14: 2008 (VDE 0165, Part 1) Explosive Atmospheres – Electrical Installations Design, Selection and Erection.

⚠ WARNING

Incorrect electrical connection will render the explosion protection unsafe.

– Adhere to the terminal assignment.

– Do not undo the enameled screws.

– Do not exceed the maximum permissible values specified in the EC type examination certificates when interconnecting intrinsically safe electrical equipment (U_i or U_0, I_i or I_0, P_i or P_0, C_i or C_0 and L_i or L_0).

Selecting cables and wires

➔ Observe the relevant clauses of EN 60079-14 for installation of intrinsically safe circuits.

➔ Seal cable entries left unused with plugs.

➔ Fit equipment used in ambient temperatures below –20 °C with metal cable entries.

Equipment with type of protection Ex nA

In equipment operated according to type of protection Ex nA (non-sparking equipment), circuits may be connected, interrupted or switched while energized only during installation, maintenance or repair.

Certified cable glands and blanking plugs with appropriate type of protection and IP rating ≥ 6X and suitable for the certified temperature range must be used.

The signal circuit is connected using screw terminals (terminal 11/12) for electrical conductors with a wire cross-section from 0.2 to 2.5 mm². The tightening torque is 0.5 to 0.6 Nm.

The option modules' circuits are connected using screw terminals for electrical conductors with a wire cross-section from 0.14 to 1.5 mm². The tightening torque is 0.5 to 0.6 Nm.

Equipment with type of protection Ex t

In equipment operated according to type of protection Ex t (protection by enclosure), circuits may be connected, interrupted or switched while energized only during installation, maintenance or repair.

Opening the enclosure cover in potentially explosive dust atmospheres during operation may cause the explosion protection to become ineffective.

Certified cable glands and blanking plugs with appropriate type of protection and IP rating ≥ 6X and suitable for the certified temperature range must be used.

The signal circuit is connected using screw terminals (terminal 11/12) for electrical conductors with a wire cross-section from 0.2 to 2.5 mm². The tightening torque is 0.5 to 0.6 Nm.

The option modules' circuits are connected using screw terminals for electrical conductors with a wire cross-section from 0.14 to 1.5 mm². The tightening torque is 0.5 to 0.6 Nm.

5.10.1 Cable entry with cable gland

The housing of the TROVIS SAFE 3793 Positioner has four threaded boreholes, which can be fitted with cable glands as required.

➔ The cable gland version depends on the ambient temperature range. See technical data in section 3.7 on page 30.

➔ The screw terminals are designed for wire cross-sections of 0.2 to 2.5 mm² (tightening torque 0.5 Nm).

➔ Connect **one** current source at the maximum.

In general, it is not necessary to connect the positioner to a bonding conductor. Should this be required, however, this conductor can be connected inside or outside of the device (see Fig. 4 on page 23).

5.10.2 Connecting the electrical power

NOTICE

Risk of malfunction due to incorrect sequence of mounting, installation and start-up.
Observe the following sequence.

1. *Remove the protective caps from the pneumatic connections.*
2. *Mount the positioner on the valve.*
3. *Connect the supply air.*
4. *Connect the electrical power.*
5. *Perform settings.*

➔ Connect the electrical power (mA signal) as shown in Fig. 20.

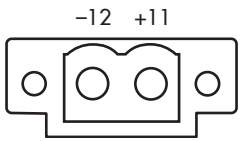

Fig. 20: *Terminal assignment*

Accessories

Cable glands M20x1.5	Order no.
Black plastic (6 to 12 mm clamping range)	8808-1011
Blue plastic (6 to 12 mm clamping range)	8808-1012
Nickel-plated brass (6 to 12 mm clamping range)	1890-4875
Nickel-plated brass (10 to 14 mm clamping range)	1922-8395
Stainless steel 1.4305 (8 to 14.5 mm clamping range)	8808-0160

Adapter M20x1.5 to ½ NPT	
Powder-coated aluminum	0310-2149
Stainless steel	1400-7114

5.10.3 Establishing communication

Communication between computer and positioner using an FSK modem or handheld communicator (if necessary, using an isolation amplifier) is based on the HART® protocol.

Viator FSK modem

- RS-232 Non ex Order no. 8812-0130
- USB Non ex Order no. 8812-0132

If the load impedance of the controller or control station is too low, an isolation amplifier must be connected between controller and positioner (interfacing as for positioner connected in hazardous areas). See Fig. 21.

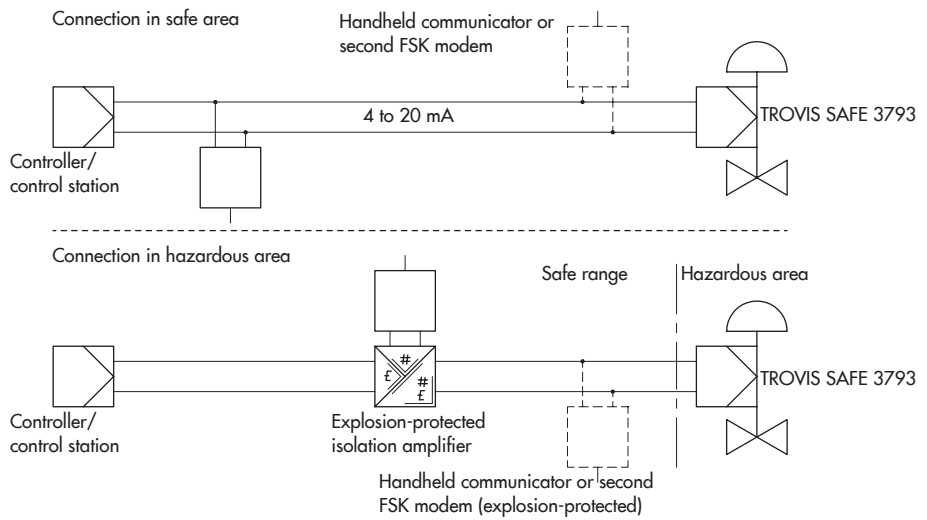

Fig. 21: *Connection with FSK modem*

If the positioner is used in hazardous areas, an explosion-protected isolation amplifier must be used.

Using the HART® protocol, all connected control room and field units can be addressed individually with their address using a standard bus.

Standard bus:

In the standard bus mode, the positioner follows the analog set point. The bus address/polling address has to be within a range of 1 to 15.

When communication errors occur:

Communication errors may occur when the process controller/control station output is not HART®-compatible.

Alternatively, a 250 Ω resistor can be connected in series and a 22 µF capacitor can be connected in parallel to the analog output of positioners without explosion protection and positioners with type of protection Ex tb (Fig. 22). The load for the controller output will increase as a result.

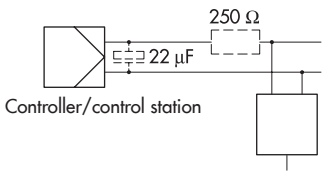

Fig. 22: *Adapting the output signal*

5.10.4 Switching amplifier according to EN 60947-5-6

For operation of the limit switches, switching amplifiers must be connected in the output circuit. They must comply with the limit values of the output circuits conforming to EN 60947-5-6.

➔ Observe the relevant regulations for installation in hazardous areas.

For applications in safe areas (non-hazardous areas), limit switches can be directly interconnected to the binary input of the PLC in accordance with IEC 61131. This applies to the standard operating range for digital inputs according to Clause 5.2.1.2 of IEC 61131-2 with the rated voltage of 24 V DC.

6 Optional modules

The modular design of the TROVIS SAFE 3793 Positioner allows it to be adapted to specific requirements. The air capacity and direction of action can be varied by the installation of different pneumatic modules (see section 6.1). Optional additional functions are available by using option modules (see section 6.2).

If the positioner is ordered with additional pneumatic modules (Fig. 23) and/or option modules (Fig. 24, Fig. 25), they are ready installed and connected upon delivery.

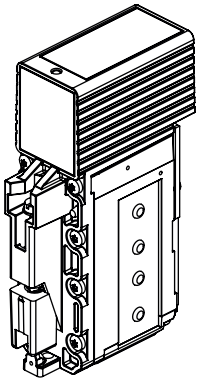

Fig. 23: *Pneumatic module*

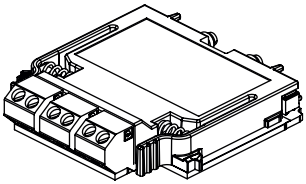

Fig. 24: *Option module*

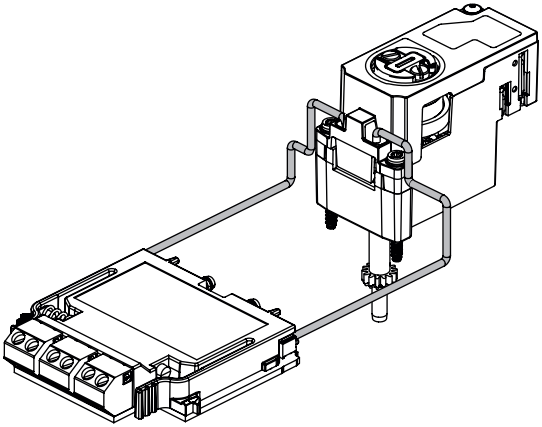

Fig. 25: *Option module with hardware limit switches (connected with each other over signal lines)*

6.1 Pneumatic modules

The air capacity and direction of action in the TROVIS SAFE 3793 Positioner can be varied by using and combining different pneumatic modules. A maximum of two pneumatic modules can be used in a positioner.

Table 13: *Available pneumatic modules for the TROVIS SAFE 3793 Positioner*

Article code	Function of the pneumatic module
P3799-0000	Dummy module (seals the slot connections and must be used when only one pneumatic module is installed)
P3799-0001	Output 138 and Output 238 module (single and double acting)
P3799-0002	Output 138 module (single acting)
P3799-0003	Output 238 module (single acting)

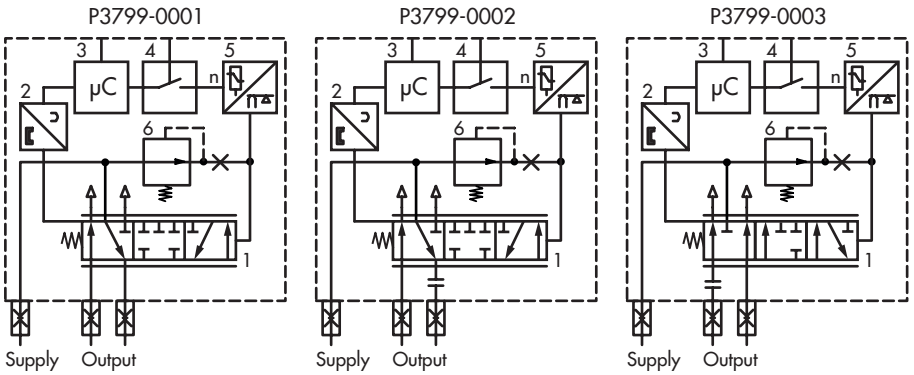

1 Spool valve
2 Travel sensor
3 Microcontroller
4 Safety control circuit
5 i/p converter
6 Pressure reducer

Fig. 26: *Design of pneumatic modules*

NOTICE

Risk of malfunction due to the incorrect combination of pneumatic modules.
Do not combine modules P3799-0001 and P3799-0003.

Table 14: *Combinations of pneumatic modules*

Slot A	Slot B	Function	Air capacity	Fail-safe position	
				Output 138	Output 238
P3799-000**1**	P3799-000**0**	Single/double acting	K_{VS} 0.35	Exhaust	Supply
P3799-000**1**	P3799-000**1**	Single/double acting	K_{VS} 0.70	Exhaust	Supply
P3799-000**2**	P3799-000**3**	Single acting, 2x independent	K_{VS} 0.35	Exhaust	Exhaust

6.1.1 Installing and removing pneumatic/dummy modules

⚠ WARNING

Risk of injury due to high pressure inside device.
Only install or replace pneumatic modules when the positioner is depressurized.

! NOTICE

Incorrect installation and removal of pneumatic modules will damage the positioner.
Disconnect the electrical power before installing or removing the pneumatic modules.

Two slots are available for the pneumatic modules in the positioner:

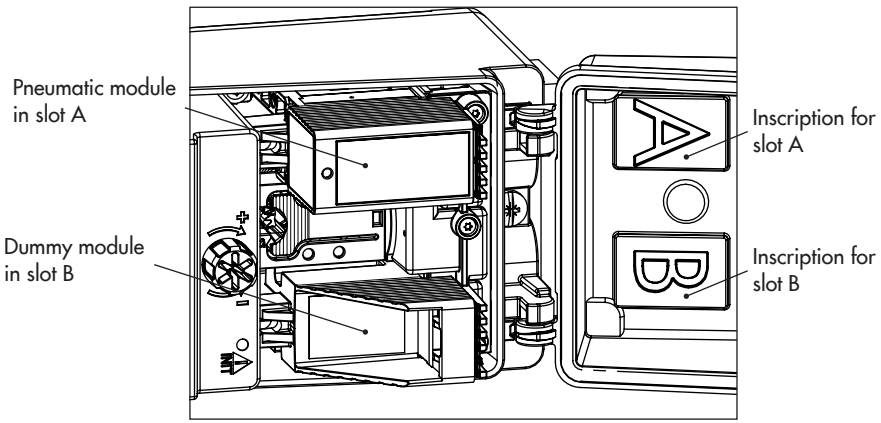

Fig. 27: *Pneumatic module slots*

Note

Either two pneumatic modules must be installed or one pneumatic module together with a dummy module must be installed. A slot without an installed module is not permissible.

Removing the pneumatic/dummy module

1. Unscrew the fastening screw using a flat-blade screwdriver (15 turns of the screw).
2. Push the module towards the display and carefully pull it out.
3. Store the module in its packaging.

Installing the pneumatic/dummy module

1. Observe permissible combinations of pneumatic modules specified in Table 14 on page 69.
2. Check that the seal on the module is properly seated (see Fig. 29): the seal must not protrude out of the groove.
3. Turn the screw to push the wedge downward as far as it will go (see Fig. 28).
4. Insert the module as shown in Fig. 30. Press the module toward the display and insert it along the wedge.
5. Lightly push the module downward, while tightening the fastening screw using a suitable flat-blade screwdriver. Tighten it with a torque of 0.7 ± 0.1 Nm.

Note

If the changes have been made to the pneumatic modules, the positioner must re-initialized. See section 8.5.

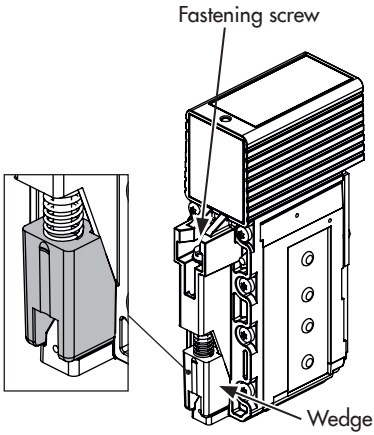

Fig. 28: *Wedge for fastening*

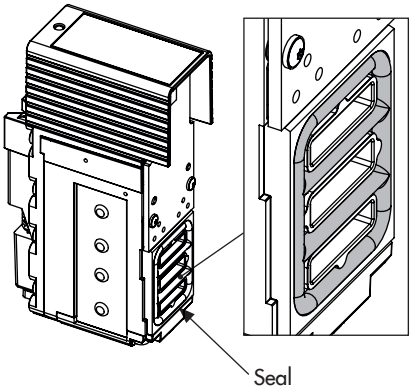

Fig. 29: *Seal of the pneumatic module*

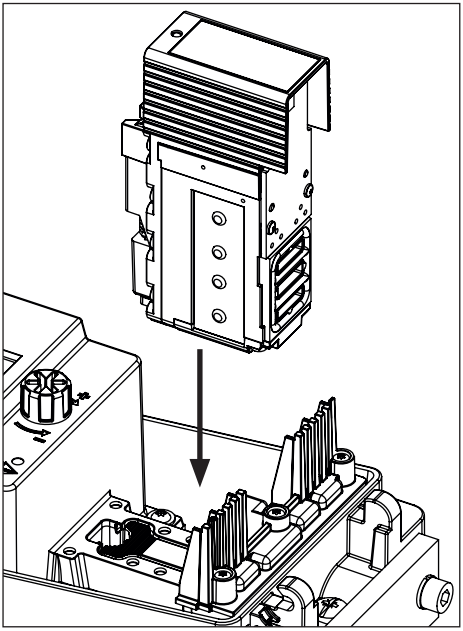

Fig. 30: *Inserting/exchanging the pneumatic module*

6.2 Optional additional functions

Additional functions are available for the TROVIS SAFE 3793 Positioner, which can be added to the positioner as option modules:

Hardware limit switches

Limit switches with mechanical position pick-up issue a signal to a control system when the valve reaches one of the two adjustable limits.

- **Inductive limit switches:** inductive proximity switches are operated by adjustable tags. The operation of the inductive limit switches requires switching amplifiers to be connected in the output circuit (see section 5.10.4).
- **Mechanical limit switches:** microswitches are operated by rollers with adjustable switching point.

Software limit switches

The software limit switches signalize that the valve has reached one of the two adjustable limits.

- When limit 1 is not reached
- When limit 2 is exceeded

The following versions are available:

- Connection of a PLC according to IEC 61131-2, P_{max} = 400 mW
- Connection to NAMUR switching amplifier according to EN 60947-5-6 (see section 5.10.4)

Analog position transmitter

The position transmitter is a two-wire transmitter and issues the travel sensor signal as a 4 to 20 mA signal processed by the microcontroller. This signal is issued independent of the positioner's input signal. Additionally, the position transmitter allows positioner faults to be indicated over a signal current of <2.4 mA or >21.6 mA.

Forced venting

If the voltage falls below 11 V at the terminals of the option module, the pneumatic outputs of the positioner are either vented or filled with air depending on the combination of the pneumatic modules (see Table 14 on page 69). This occurs regardless of the set point. A voltage above 15 V keeps the forced venting function inactive.

Binary input

The binary inputs can be floating or non-floating (0 to 24 V) and can be configured to provide the following functions:

- **Switching state:** the switching state of the binary input is logged.
- **On-site write protection:** after the first initialization, a local write protection can be activated. While the binary input is active, no settings can be changed at the positioner. The positioner cannot be re-initialized.
- **PST (partial stroke test):** test to check the valve's ability to move and assess its dynamic control response (PST: partial stroke test/FST: full stroke test).

  - **Start PST:** perform a step response test in an adjustable range.
  - **Start FST:** perform a step response test over the entire travel range following configurable parameters).
- **Move valve to fixed value:** move the valve to a defined position (valve position in %).

In addition, a binary input can be deactivated.

Binary output

A fault alarm output signalizes a fault to the control station. The following versions are available:

- Connection of a PLC according to IEC 61131-2, P_{max} = 400 mW
- Connection to NAMUR switching amplifier according to EN 60947-5-6 (see section 5.10.4)

6.2.1 Option modules

Table 15 lists all available option modules with the combinations of additional functions.

Table 15: *Available option modules for the TROVIS SAFE 3793 Positioner*

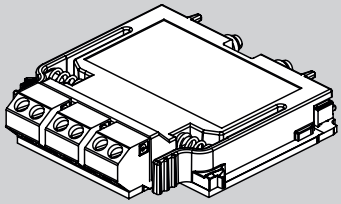

Option module		Function									
		Inductive limit switches	Mechanical limit switches	Software limit switches (NAMUR)	Software limit switches (PLC)	Analog position transmitter	Forced venting	Binary input	Binary output		
Article code	**ID code**										**Description**
Z3799-00000	Dummy module										Sec.6.2.3
Z3799-xxx10	[N]			•					•		Sec.6.2.4
Z3799-xxx11	[X]				•				•		Sec.6.2.4
Z3799-xxx15 [1)]	[P]	•							•		Sec.6.3
Z3799-xxx30 [1)]	[M]		•								Sec.6.3
Z3799-xxx40	[T]					•		•	•		Sec.6.2.4
Z3799-xxx80	[V]						•	•	•		Sec.6.2.4

1) Consisting of an option module and a mechanical assembly unit

NOTICE

Risk of malfunction due to the incorrect combination of option modules.
Do not use option modules with the identical ID code together in one positioner.

Table 16: *Explosion protection certification for the option modules*

Article code of option module	**Z3799-**	**x**	**x**	**x**	**x**	**x**
Explosion protection						
Without		0	0	0		
Ex ia		1	1	0		
Ex t		5	1	0		
Ex t/Ex nA		8	1	0		
Ex nA		8	5	0		

6.2.2 Slots for option modules

A maximum of two option modules can be used in a positioner (Fig. 31).

– Slot **C** (top slot)
– Slot **D** (bottom slot)

➔ Select slots as listed in Table 17 on page 80.

! NOTICE

Incorrect installation of option modules will damage the positioner.
Do not insert the hardware limit switches into slot C.

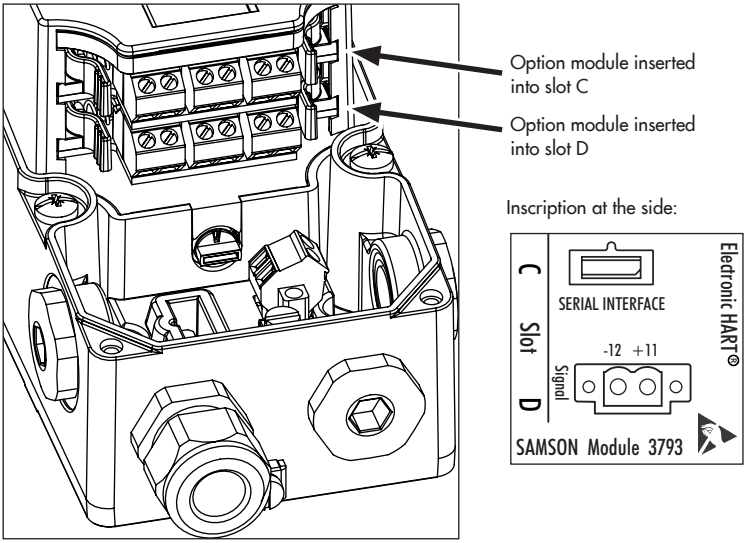

Fig. 31: *Slots for option modules*

6.2.3 Dummy option module

A dummy module is inserted into slot D to protect the slot's contacts upon delivery of the positioner without option modules.

NOTICE

Risk of electronics damage due to unprotected contacts.
Seal empty slots with dummy modules.

Depending on which slot remains free, the dummy module must be adapted to the slot by breaking off the corresponding edges. Break off the edges with a pair of pliers at the predetermined breaking points as shown in Fig. 33 and Fig. 34.

Removing the dummy module

1. Take hold of the dummy module at the tabs.
2. Press the tabs and carefully pull the dummy module out of the slot.

Inserting the dummy module

1. Select the right slot for the dummy module.
2. Take hold of the dummy module at the tabs.
3. Press the tabs and carefully push the dummy module into the slot until the latches engage into the recesses intended for them.
4. Release the tabs to allow the latches to engage with a clicking sound.

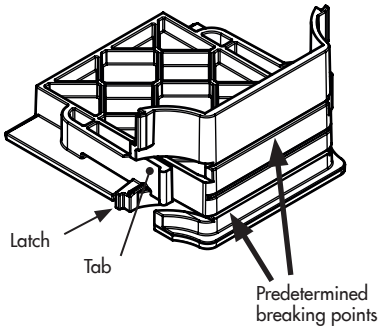

Fig. 32: *Dummy module in the delivered state, inserted into slot D, both slots are sealed.*

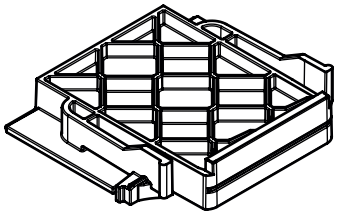

Fig. 33: *Dummy module adapted, top and bottom edges snapped off, inserted into slot C, slot C is sealed.*

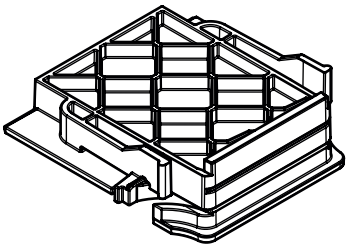

Fig. 34: *Dummy module adapted, top edge snapped off, inserted into slot D, slot D is sealed.*

6.2.4 Inserting or removing option modules

⚠ DANGER

Risk of fatal injury due to ineffective explosion protection as a result of impermissible use of the option modules.

Only install option modules with the same explosion protection as that of the positioner.

! NOTICE

Incorrect installation and removal of option modules will damage the positioner.
Before inserting or removing the option modules, disconnect the power supply.

! NOTICE

Electrostatic discharge will damage the option modules.
– Observe the ESD requirements according to IEC 61340-5-1.
– Only store option modules in their original packaging.

➔ Before inserting the option modules, check their type of explosion protection according to the article code in Table 17 on page 80.

Inserting the option module

1. Select the slot for option module as listed in Table 17.
2. Take hold of the option module at the tabs.
3. Press the tabs and carefully push the option module into the slot until the latches engage into the recesses intended for them.
4. Release the tabs to allow the latches to engage.
5. Check to ensure the option module is seated properly.
6. Connect the wiring as shown in Table 17.

i Note

After inserting the option module, stick the corresponding labels (see section 2.2) next to the positioner's nameplate on the housing.
➔ Take the label out of the packaging.

Removing the option module

1. Disconnect the connecting lines.
2. Take hold of the option module at the tabs.
3. Press the tabs and carefully pull the option module out of the slot.
4. Store the option module in its packaging.
5. Remove the label from the positioner housing.

Observe the ESD requirements.

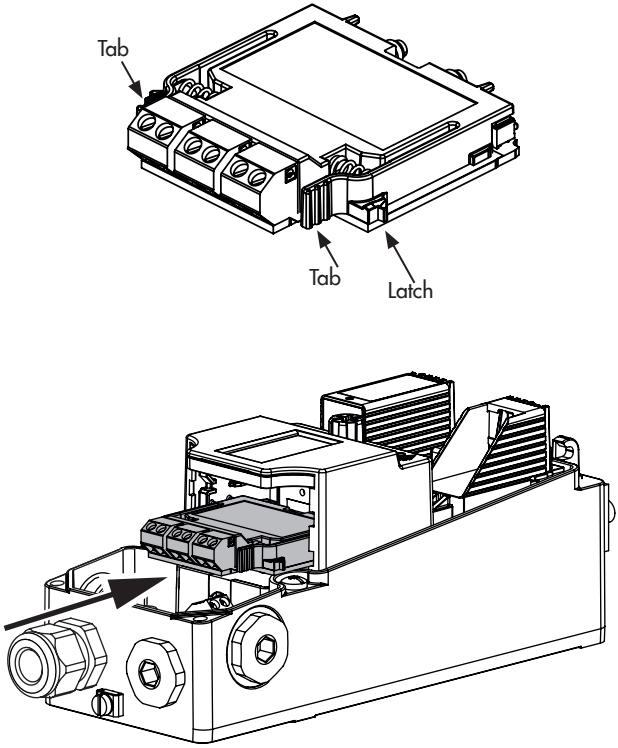

Fig. 35: *Inserting the option module*

Table 17: *Slot position and terminal assignment of the option modules*

Z3799-xxx10 [N] · Software limit switches with binary output (NAMUR)

Slot	Terminal assignment
C or D	

Description	Terminal	
Software limit switch (NAMUR 1)	N	+45
		–46
Software limit switch (NAMUR 2)	N	+55
		–56
Binary input (NAMUR)	N	+83
		–84

Z3799-xxx11 [X] · Software limit switches with binary output (PLC)

Slot	Terminal assignment
C or D	

Description	Terminal	
Software limit switch (PLC 1)	X	+91
		–92
Software limit switch (PLC 2)	X	+93
		–94
Binary output (PLC)	X	+95
		–96

Z3799-xxx14 [P] · Inductive limit switches with binary output (NAMUR)

Slot	Terminal assignment
D	

NOTICE!
Do not insert the module into slot C. The option module will be damaged.

Description	Terminal	
Binary input (NAMUR)	P	+83
		–84
Inductive limit switch 1	P	+41
		–42
Inductive limit switch 2	P	+51
		–52

Z3799-xxx30 [M] · Mechanical limit switches

Slot	Terminal assignment
D	

NOTICE!
Do not insert the module into slot C. The option module will be damaged.

Description	Switching function	Terminal	
Mechanical limit switch 1 (change-over contact)	NC	M	47
	C		48
	NO		49
Mechanical limit switch 2 (change-over contact)	NC	M	57
	C		58
	NO		59

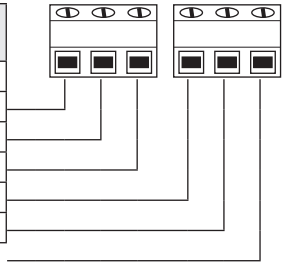

Z3799-xxx40 [T] · Position transmitter with binary input (24 V) and binary output (NAMUR)

Slot	Terminal assignment
C or D	

Description	Terminal	
Position transmitter 4 to 20 mA	T	+31
		–32
Binary input 24 V	T	+87
		–88
Binary input (NAMUR)	T	+83
		–84

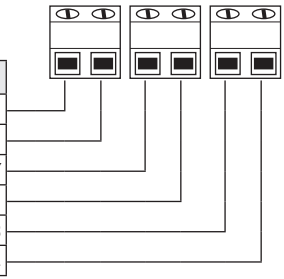

Z3799-xxx80 [V] · Forced venting with binary input (24 V) and binary output (NAMUR)

Slot	Terminal assignment
C or D	

NOTICE!
Set switch for forced venting function accordingly. See section 6.4.

Description	Terminal	
Forced venting	V	+81
		–82
Binary input 24 V	V	+87
		–88
Binary input (NAMUR)	V	+83
		–84

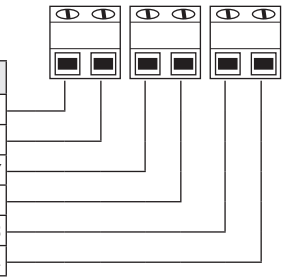

6.3 Hardware limit switches

For the hardware limit switches, the mechanical assembly unit must be installed in addition to the option module (limit switches and option module are connected with each other over signal lines).

NOTICE

Incorrect installation and removal of option modules will damage the positioner.
Before inserting or removing the option modules, disconnect the power supply.

NOTICE

Electrostatic discharge will damage the option modules.
– Observe the ESD requirements according to IEC 61340-5-1.
– Only store option modules in their original packaging.

6.3.1 Inserting hardware limit switches

➔ Insert the option module for hardware limit switches **only into slot D** (bottom slot).

1. Check that the connector on the bottom of the option module is properly seated.
2. Take hold of the option module at the tabs.
3. Press the tabs and carefully push the option module into slot D until the latches engage into the recesses intended for them.
4. Release the tabs to allow the latches to engage with a clicking sound.
5. Check to ensure the option module is seated properly.
6. Guide the mechanical assembly over the display and insert as shown in Fig. 36. Make sure that the pinion shaft engages with the gear wheel for transmission of the position pick-up.

➔ If it cannot be inserted because the gear wheels are in the way, slightly turn the pinion shaft.

7. Carefully push the mechanical assembly unit down as far as it will go.
8. Use a suitable screwdriver to tighten the screws using a tightening torque of 1.2 ± 0.2 Nm.

Note

If the hardware limit switches are installed in the positioner for the first time, the screws tap a thread into the boreholes. In this case, it will be more difficult to screw in the screws. If the hardware limit switches have been removed, proceed as follows to re-install them:
– Briefly turn the fastening screws counterclockwise with the screwdriver to engage them into the ready-tapped thread.
– Tighten the screws applying a tightening torque of 1.2 ± 0.2 Nm.

Observe the ESD requirements.

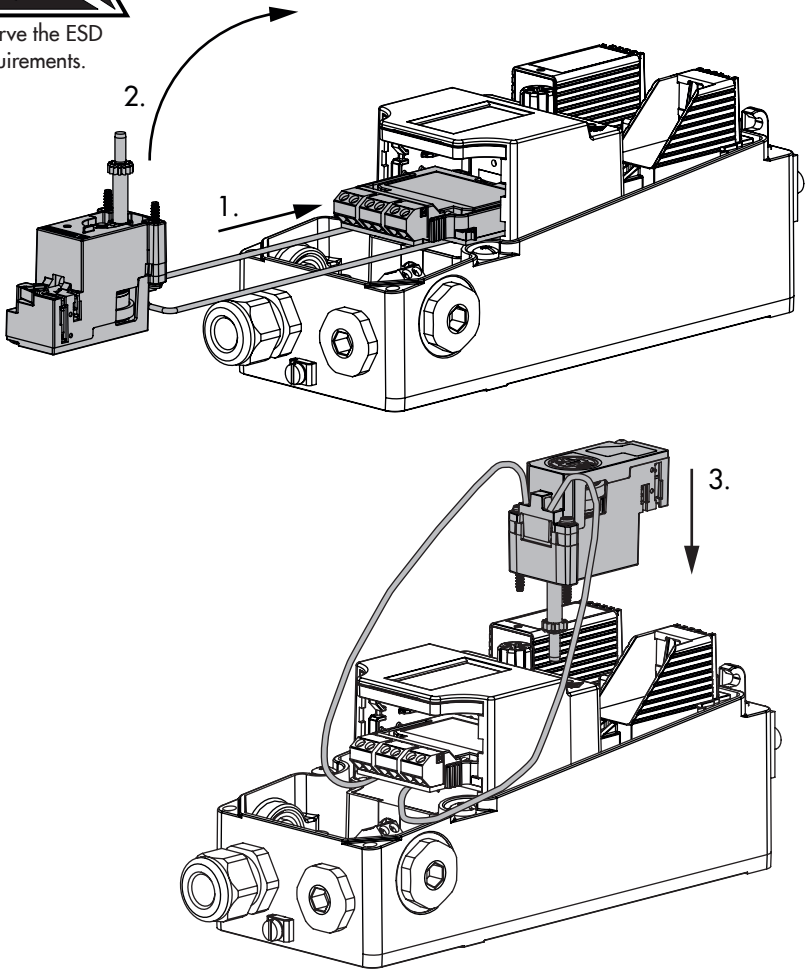

Fig. 36: *Installing the hardware limit switches*

9. Clamp the two connecting lines between the electronic module and the positioner housing and push them downward (as shown in Fig. 37).

➔ Make sure that the wires do not project out of the housing and get caught when closing the housing cover.

10. Connect the wiring as shown in Table 17.

11. Adjust the switching points as described in section 6.3.2.

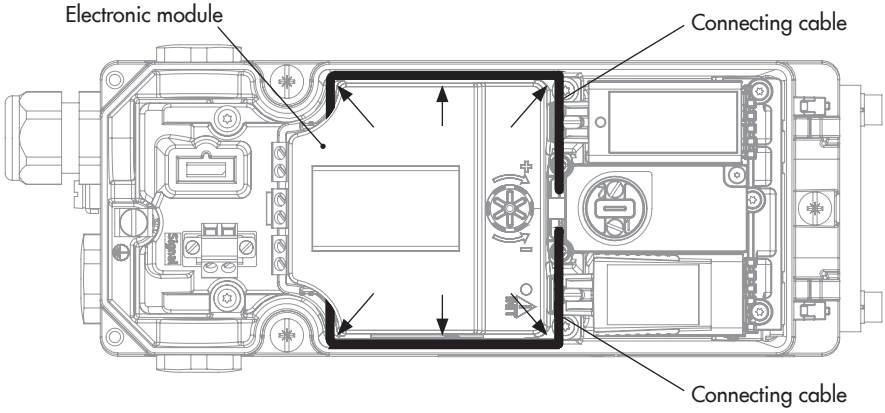

Fig. 37: *Routing the connecting lines*

6.3.2 Adjusting the switching points

The switching points of the limit switches are usually adjusted so that a signal is issued in the travel/angle end positions. Optionally, the switching point can also be adjusted to any position within the travel/angle range, e.g. if an intermediate position is to be indicated.

Both switching points are adjusted at slotted-head screws on the top of the mechanical assembly (Fig. 38):

– Limit switch 1 (screw 1)
– Limit switch 2 (screw 2)

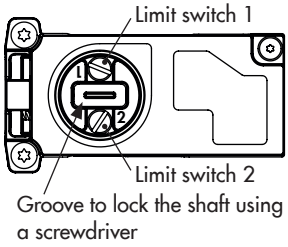

Fig. 38: *Adjusting the switching points*

1. Move the valve to the position at which the switching point is to be activated.
2. Adjust the switching points as follows:
   Mechanical limit switches:
   Turn the adjustment screw until the cam of cam disk reaches the roller of the microswitch and the output signal changes.

   Inductive limit switches:
   Turn the adjustment screw until the metal tag moves out of the magnetic field of the proximity sensor and the output signal changes.
3. Turn the adjustment screw in the opposite direction to compensate for the switching point shift due to temperature changes. Refer to the following table to determine how many times the screw must be turned.

Switching point shift	
Opening angle	Travel
≤ 2°	≤ 0.8 mm
Turns of the adjustment screw	
1/16	1/16

4. Move the valve away from the switching position and check whether the output signal changes.
5. Move the valve back to the switching position and check the switching point.

6.3.3 Locking the shaft

To lock the positioner shaft on mounting the positioner on the valve (see sections 5.3 and Fig. 9 on page 45), insert a flat-blade screwdriver into the groove of the limit switch assembly (see Fig. 38) and hold the shaft in position 2.

NOTICE

Impermissible turning of the positioner shaft will damage the positioner.
Only adjust the positioner shaft with a flat-blade screwdriver to lock it in place during attachment to the valve.

6.4 Forced venting

The switch for the forced venting function (see Fig. 39) is set to the required switch position upon delivery of the TROVIS SAFE 3793 Positioner. If the option module with forced venting function is installed later or removed, the switch must be set as shown in Table 18.

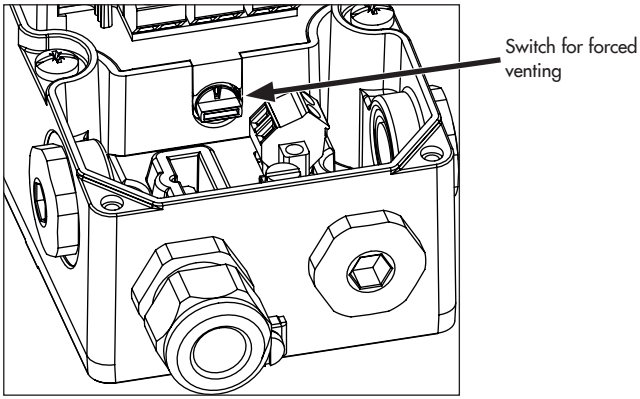

Fig. 39: *Switch for forced venting*

➔ Set the switch as shown in Table 18 using a flat-blade screwdriver.

Table 18: *Switch position*

	Option module for forced venting function			
Slot C	Not used	Used	Not used	Used
Slot D	Not used	Not used	Used	Used
Switch position	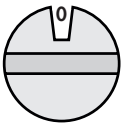	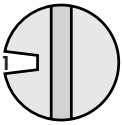	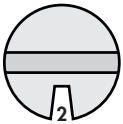	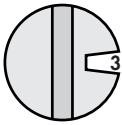

i ***Note***

The positioner changes to the fail-safe position if the switch position does not match the option module configuration.

7 Operation

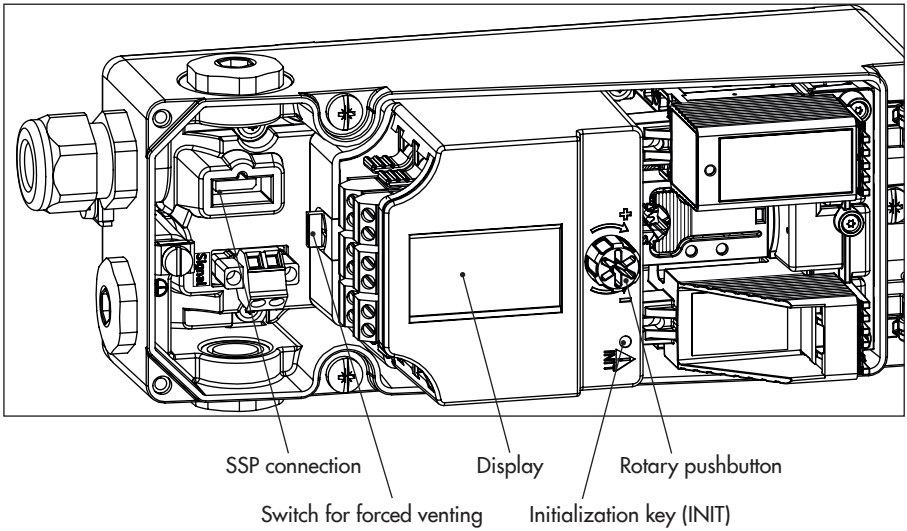

Fig. 40: *Operating controls of TROVIS SAFE 3793 Positioner*

7.1 Rotary pushbutton

The rotary pushbutton for on-site operation is located next to the display (right or left, depending on the mounting position).

- Turn: select menu item, parameters or values.
- Press: confirm setting.
- Keep pressed down for two seconds: return to menu level (***ESC*** with progress bar appears).

7.2 Initialization key (INIT)

⚠ WARNING

Risk of injury by exposed moving parts on the positioner, actuator or valve.
Do not touch or block exposed moving parts.

! NOTICE

The process is disturbed by the movement of the actuator or valve.
Do not perform the initialization while the process is running. First isolate the plant by closing the shut-off valves.

For normal operation, simply start initialization by pressing the INIT key after mounting the positioner on the valve. In this case, the initialization is performed using the MAX initialization mode (see section 8.4.4) with the ATO fail-safe position (see section 8.4.6). Additionally, the default settings in the parameter list (see section 12.3.1) apply.

Proceed as follows for fast initialization:

1. Mount the positioner on the valve.
2. Connect the supply air.
3. Connect the electrical power.

➔ During the first start-up, the wizard is displayed (see section 8.1).

4. Adjust the software restriction as described in section 8.4.8.
5. Use a thin object to press the initialization key (INIT).

7.3 Switch for forced venting

➔ See section 6.4

7.4 Display

Note

The display's operating range is from –30 to +65 °C. The readability of the display is restricted outside this temperature range.

As soon as the electrical power (mA control signal) is connected, the **wizard** is displayed during the first start-up (see section 8.1) and, in all other cases, the **main display** (Fig. 41, left) appears, which is marked by the display numbering **0-0** to **0-10** (at the top right-hand corner of the display). Displayed icons provide information on the operating mode, status etc. (see section 7.4.2). Press the ⊛ key to go from the main display to the **menu level** (Fig. 41, right). All settings can be made and functions executed in the menu level. Section 8.2 contains a description of the basic start-up settings. A list of the menu structure and parameters for on-site operation is included in the Appendix (section 12.3 on page 115 onwards).

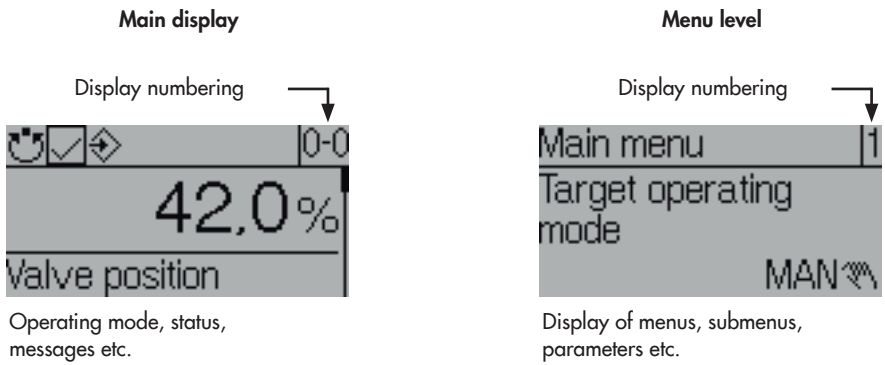

Fig. 41: *Main display and menu level of the TROVIS SAFE 3793 Positioner*

➔ Turn ⊛ clockwise to scroll through from display 0-0 to 0-10. Displays 0-0 to 0-10 are hidden or shown depending on the positioner's operating mode, configuration, status etc.

➔ Press ⊛ to go from the **main display** to the **menu level**.

7.4.1 Menu structure

Main display		
0-0	Start screen: Valve position in %	See section 7.4.
0-1	Valve position in degrees	See section 7.4.
0-2	Set point in %	See section 7.4.
0-3	Set point deviation in %	See section 7.4.
0-4	Supply pressure in bar	See section 7.4.
0-5	Status of pneumatic module in slot A [1)]	See section 7.4.
0-6	Status of pneumatic module in slot B [1)]	See section 7.4.
0-7	Status of option module in slot C [1)]	See section 7.4.
0-8	Status of option module in slot D [1)]	See section 7.4.
0-9	Messages [2)]	See section 7.4.
0-10	Press ⊛ to go to the menu level.	See section 7.4.

Menu level		
1	Target operating mode	See page 115
2	Set point (open-loop control)	See page 115
3	Manual set point (MAN)	See page 115
4	Reason for fail-safe position	See page 115
5	Change reading direction	See section 7.4.3.
6	User level	See section 8.3.
7	Start-up	See section 8.4 and page 116
8	Configuration	See page 118
8-1	Set point processing	See page 118
8-2	Identification	See page 119
8-3	HART® communication	See page 120

8-4	Control parameters	See page 120
8-5	Slot options	See page 121
8-6	Pneumatic modules	See page 121
9	Process data	See page 123
10	Diagnosis/maintenance	See page 124
11	Reset functions	See section 8.7.
12	Wizard	See section 8.1.

1) Only visible in the event of an error condition
2) Some of the messages can be confirmed: in this case, select the message and press ⊛ (only possible when the configuration is enabled, see section 8.3).

7.4.2 Display icons

Table 19: *Operating modes*

Icon	Operating mode	Description
	Automatic mode	The positioner is in closed-loop operation and follows the mA signal.
	Manual mode	The positioner follows the manual set point instead of the mA signal.
	SAFE (fail-safe position)	The pneumatic outputs of the positioner are either vented or filled with air depending on the combination of the pneumatic modules (see Table 14).
	Open-loop control mode [1]	The open-loop control mode allows the valve position to be adjusted manually (even when the positioner has not been initialized).
	Function mode	The positioner initialization or a test is in progress.

1) The open-loop control mode cannot be directly selected and is the same as the manual mode when the positioner has not yet been initialized.

Table 20: *NAMUR status*

Icon	Meaning
	Failure
	Function check
	Out of specification
	Maintenance demanded
	OK

Table 21: *Other icons*

Icon	Meaning
	Configuration enabled (on-site write protection is deactivated)
	Write protection
	Option module in slot C
	Option module in slot D
	Binary contact 1 active
	Binary contact 2 active
	Binary contact 3 active

7.4.3 Changing the display's reading direction

The reading direction of the display can be adapted to the mounting situation (turned 180°) at any time.

1. Press ⊛ (in start screen) to change to the main menu.
2. Turn ⊛ until 'Change reading direction' appears.
3. Press ⊛ to change reading direction.

7.5 HART® communication

Conditions for HART® communication:

➔ Supply the positioner with at least 3.6 mA.

➔ Connect the FSK modem in parallel to the current loop.

A DTM file (Device Type Manager) conforming to the Specification 1.2 is available for communication. This allows the device, for example to be run with the PACTware user interface. All the positioner's parameters are accessible over the DTM and the user interface.

➔ For start-up, first proceed as described in section 8.

---

i Note

*If complex functions are started in the positioner, which require a long calculation time or lead to a large quantity of data being saved in the volatile memory of the positioner, the alert 'busy' is issued by the DTM file. This alert is **not an error message** and can be simply confirmed.*

Locking HART® communication

The write access for HART® communication can be locked. This function can be enabled or disabled locally at the positioner (**Configuration [8]/HART communication [8.3]/Locked [8.3.1]**) (setting options: Yes/No, default setting: No, see parameter list on page 120).

Locking on-site operation

The on-site operation can be locked over HART® communication. This locking function can only be disabled over HART® communication. On-site operation is enabled by default.

Note

The access over TROVIS-VIEW is also locked through the locking of on-site operation over HART® communication.

7.5.1 Dynamic HART® variables

The HART® specification defines four dynamic variables consisting of a value and an engineering unit. These variables can be assigned to device parameters as required. The universal HART® command 3 reads the dynamic variables out of the device. This allows manufacturer-specific parameters to also be transferred using a universal command.

In the TROVIS SAFE 3793 Positioner, the dynamic variables can be assigned as follows in the Configuration folder (> HART communication):

Table 22: *Dynamic HART® variables assignment*

Variable	Unit, description
Set point at the input	%
Valve position	%
Error signal	%
Status messages	Current state active/not active
Slot C.1: binary input	Current state active/not active
Slot D.1: binary input	Current state active/not active
Slot C.2: binary input	Current state active/not active
Slot D.2: binary input	Current state active/not active
Slot C.3: binary input	Current state active/not active
Slot D.3: binary input	Current state active/not active
Total valve travel	Current total valve travel
PST outcome	Not performed/successful/test-specific error message
FST outcome	Not performed/successful/test-specific error message
Discrete valve position	Positioner not initialized, Closed, Open, Intermediate position
Supply pressure	bar
Current temperature	Reading of current temperature

8 Operating the positioner

NOTICE

Risk of malfunction due to incorrect sequence of mounting, installation and start-up.
Observe the following sequence.

1. *Remove the protective caps from the pneumatic connections.*
2. *Mount the positioner on the valve.*
3. *Connect the supply air.*
4. *Connect the electrical power.*
5. *Perform settings.*

Once the mounting and start-up activities have been completed, you can start with the settings (see section 8.2). The positioner can be operated immediately after the electrical power supply (mA control signal) has been connected.

8.1 First start-up

After the TROVIS SAFE 3793 Positioner is put into operation for the first time after shipment, the wizard starts automatically after the electrical power is connected. It assists users to set the display's reading direction and the menu language (English during the first start-up). The reading direction of the display depends on the mounting position (position of the pnematic modules, right or left of the display).

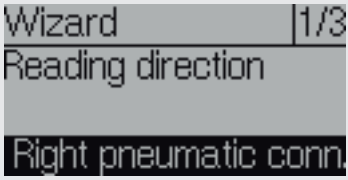

1. Turn ⊛: determine the reading direction of the display (mounting position with pneumatic modules on the right or left of the display).
2. Press ⊛ twice: confirm reading direction.
3. Turn ⊛: select language.
4. Press ⊛ three times: confirm language.

➔ Afterwards, the display automatically changes to the main display (see Fig. 41).

➔ When **ESC** is selected in the wizard, you can navigate through the displays of the wizard 1/3 (mounting position), 2/3 (language) and 3/3 (exit wizard) by selecting **forward** (>) and **back** (<).

➔ If no settings are entered within five minutes, the positioner automatically returns to the main display (see Fig. 41).

8.2 Start-up settings

➔ Perform the start-up settings, keeping the following sequence:

Action	Section
1. Enable configuration	8.3
2. Select 'Start-up' menu	8.4
3. Set the actuator type	8.4.1
4. Specify pin position	8.4.2
5. Set nominal range	8.4.3
6. Select initialization mode	8.4.4
7. Set initialization mode	8.4.5
8. Defining the fail-safe position	8.4.6
9. Assign the pneumatic output	8.4.7
10. Adjust the software restriction	8.4.8
11. Initialize the positioner	8.5

8.3 Enabling configuration

1. Press ⊛ (in start screen) to change to the **main menu**.
2. Turn ⊛ until **User level [6]** appears.
3. Press and turn ⊛ until **On-site: write** appears.
4. Press ⊛ to confirm.
5. Keep ⊛ pressed down for two seconds to return to the start screen.

➔ Configuration is enabled: indicated by icon.

i ***Note***

Configuration is locked again if no settings are entered within 5 min.

8.4 Start-up menu

1. Press ⊛ (in start screen) to change to the **main menu**.
2. Turn ⊛ until **Start-up [7]** appears.
3. Press ⊛ to go to the **Start-up** menu.

8.4.1 Setting the actuator type

Three different parameters are available for selection:

– Linear actuator
– Rotary actuator
– Linear actuator (expert) with separate setting options for pin position and nominal range

1. Turn ⊛ (within **Start-up [7]** menu) until **Actuator [7.1]** appears.
2. Press and turn ⊛ to set the actuator type.
3. Press ⊛ to confirm the setting.

8.4.2 Specifying the pin position

The setting options depend on the entered actuator type:

– For linear actuator: **Pin position [7.2]** 'None', 17, 25, 35, 50, 70, 100, 200 or 300 mm
– For rotary actuator: **pin position [7.3]:** 90° and 'No lever'
– For linear actuator (expert): **Pin position [7.4]**: 10 to 9999 mm

1. Turn ⊛ (within **Start-up [7]** menu) until **Pin position [7.2/7.3/7.4]** appears.
2. Press and turn ⊛ to enter the pin position to match how the actuator is mounted.
3. Press ⊛ to confirm the setting.

i ***Note***

*A pin position needs to be entered for the **NOM** and **SUB** initialization modes. See section 8.4.5.*

8.4.3 Setting the nominal range

The possible adjustment range depends on the entered pin position.

1. Turn ⊛ (within **Start-up [7]** menu) until **Nominal range [7.5/7.6/7.7]** appears.
2. Press and turn ⊛ to set the nominal range.
3. Press ⊛ to confirm the setting.

i ***Note***

If no pin position has been entered, ***Nominal range*** *is only available for the* ***Linear actuator (expert)*** *actuator type.*

8.4.4 Selecting the initialization mode

During initialization the positioner adapts itself optimally to the friction conditions and the signal pressure required by the control valve. The type and extent of autotuning depends on the initialization mode selected. The following initialization modes are available:

***MAX*: Maximum range**
The positioner determines travel/angle of rotation of the closing member from the CLOSED position to the opposite travel stop and adopts this travel/angle of rotation as the operating range from 0 to 100 %.

***NOM*: Nominal range · Initialization mode for all globe valves**
The calibrated sensor allows the exact valve travel to be measured very accurately. During initialization, the positioner checks whether the control valve can move through the indicated nominal range (travel or angle) without collision. If this is the case, the indicated nominal range is adopted as the operating range.

***MAN*: Manually selected end positions · Initialization mode for globe valves**
Before starting initialization, move the control valve manually to the end positions. The positioner calculates the travel/angle difference from the two positions that the valve moved to and adopts it as the operating range. This initialization mode can only be started when the valve position differs in the end positions and the positioner has not yet been initialized.

***SUB*: Substitute calibration · To replace a positioner while the plant is running**
A complete initialization procedure takes several minutes and requires the valve to move through its entire travel range several times. In the SUB initialization mode, the control parameters are estimated and not determined by an initialization procedure. As a result, a high level of accuracy cannot be expected. A different initialization mode should be selected if the plant allows it.

The substitute calibration is used to replace a positioner while the process is running. For this purpose, the control valve is usually blocked mechanically in a certain position or pneumatically by means of a pressure signal which is routed to the actuator externally. The blocking position ensures that the plant continues to operate with this valve position. The blocking position can also be the fail-safe position when this condition is beneficial for the temporary phase.

Perform a reset before re-initializing the positioner if the substitute positioner has already been initialized. Refer to section 8.7.

8.4.5 Setting the initialization mode

i ***Note***

Configuration is locked again if no settings are entered within 5 min. Enable configuration: see 8.3.

Setting the *MAX* and *NOM* initialization modes:

1. Turn ⊛ (within **Start-up [7]** menu) until **Initialization mode [7.10]** appears.
2. Press and turn ⊛ to set the **MAX** or **NOM** initialization mode.
3. Press ⊛ to confirm the setting.

i ***Note***

*A pin position needs to be entered for the **NOM** initialization mode. See section 8.4.2.*

Setting the *MAN* initialization mode

i ***Note***

*The **MAN** initialization mode can only be started when the valve position differs in the end positions and the positioner has not yet been initialized.*

1. Turn ⊛ (within **Start-up [7]** menu) until **Initialization mode [7.10]** appears.
2. Press and turn ⊛ to set the **MAN** initialization mode.
3. Press ⊛ to confirm the setting.
4. Turn ⊛ until **Set point (open-loop control) [7.12]** appears.
5. Press and turn ⊛ to move the valve to the first end position. Enter a value from –90 to 90°.
6. Press ⊛ to confirm the value (first end position).
7. Turn ⊛ until **Adopt valve position 1 [7.13]** appears.
8. Press ⊛ to confirm the entered first valve position as valve position 1.
9. Turn ⊛ until **Set point (open-loop control) [7.12]** appears.
10. Press and turn ⊛ to move the valve to the second end position. Enter a value from –90 to 90°.
11. Press ⊛ to confirm the value (second end position).
12. Turn ⊛ until **Adopt valve position 2 [7.15]** appears.
13. Press ⊛ to confirm the entered second valve position as valve position 2.

Setting the *SUB* initialization mode

i ***Note***

*The **SUB** initialization mode is a substitute calibration, which can be selected to replace a positioner while the process is running. In this mode, the control parameters are estimated and not determined by an initialization procedure. As a result, a high level of accuracy cannot be expected. A different initialization mode should be selected if the plant allows it.*
*The **SUB** initialization mode can only be started when the positioner has not yet been initialized.*

1. Write down the current valve position in %.
2. Turn ⊛ (within **Start-up [7]** menu) until **Initialization mode [7.10]** appears.
3. Press and turn ⊛ to set the **SUB** initialization mode.
4. Press ⊛ to confirm the setting.
5. Turn ⊛ until **Pin position [7.2/7.3/7.4]** appears.
6. Press and turn ⊛ to enter the pin position to match how the actuator is mounted.
7. Press ⊛ to confirm the setting.
8. Turn ⊛ until **Nominal range [7.5/7.6/7.7]** appears.
9. Press and turn ⊛ to set the actuator's nominal range.
10. Press ⊛ to confirm the setting.
11. Turn ⊛ until **Current valve position [7.17]** appears.
12. Press and turn ⊛ to set the current valve position in % (see step 1), at which the valve is currently blocked.
13. Turn ⊛ until **Direction of rotation [7.18]** appears.

14. Press and turn ⊛ to set the direction of rotation so that the lever's direction of rotation matches the valve's closing direction.

    Example:
    The valve closes when the plug stem moves downward. This action causes the positioner's lever to turn counterclockwise (when looking at the display).

➔ Setting: Counterclockwise

i Note

*After performing the SUB initialization, the control parameters can be changed (C**onfiguration [8]/Control parameters [8.4]**, see section 12.3.1).*

8.4.6 Defining the fail-safe position

Define the fail-safe position of the valve taking the valve type and the actuator's direction of action into account:

Fail-safe position	Description
AIR TO OPEN	Signal pressure opens the valve, e.g. for a fail-close valve
AIR TO CLOSE	Signal pressure closes the valve, e.g. for a fail-open valve

1. Turn ⊛ (within **Start-up [7]** menu) until **Fail-safe position [7.11]** appears.
2. Press ⊛ and turn it to set the fail-safe position **AIR TO OPEN** or **AIR TO CLOSE**.
3. Press ⊛ to confirm the setting.

For checking purposes: after initialization is completed, the positioner display must read 0 % when the valve is closed.

8.4.7 Assigning the pneumatic primary output

Which pneumatic signal on which the diagnostics are to be based upon must be defined. OUTPUT 138 is set by default.

1. Turn ⊛ (within **Start-up [7]** menu) until **Output P3799 (primary) [7.19]** appears.
2. Press and turn ⊛ to assign **OUTPUT 138** or **OUTPUT 238**.
3. Press ⊛ to confirm the setting.

8.4.8 Adjusting the software restriction

The software restriction serves to adapt the air output capacity to the size of the actuator. The software restriction can be set for the supply or exhaust:

1. Turn ⊛ (within **Start-up [7]** menu) until **Software restriction (supply) [7.21]** appears.
2. Press and turn ⊛ to set the value (100, 75, 50 or 25 %).
3. Press ⊛ to confirm the setting.
4. Turn ⊛ until **Software restriction (exhaust) [7.22]** appears.
5. Press and turn ⊛ to set the value (100, 75, 50 or 25 %).
6. Press ⊛ to confirm the setting.

i Note

The positioner must be re-initialized if the software restriction settings are changed after initialization.

Tip

We recommend setting the software restriction for supply and exhaust to a value of 50 % for actuators with diaphragm areas ≤ 240 cm².

8.5 Initializing the positioner

Once all settings have been made according to section 8.4, the positioner initialization can be started.

⚠ WARNING

Risk of injury by exposed moving parts on the positioner, actuator or valve.
Do not touch or block exposed moving parts.

NOTICE

The process is disturbed by the movement of the actuator or valve.
Do not perform the initialization while the process is running. First isolate the plant by closing the shut-off valves.

Note

The initialization can only be started over the menu after configuration has been enabled.

1. Turn ⊛ (within **Start-up [7] menu)** until **Start initialization [7.24]** appears.
2. Press ⊛ to start initialization.
3. Confirm warning with OK.
4. Wait until the initialization process is completed.

After initialization, the positioner remains in the **Start initialization [7.24]** menu item.

➔ Keep ⊛ pressed down for two seconds to return to the **main menu**.

➔ Keep ⊛ pressed down again for two seconds to return to the start screen.

The valve position appears in % on the display. The positioner is in the automatic mode (icon), the NAMUR status is OK (icon) and configuration is still enabled (icon).

➔ **The positioner is ready for use.**

Tip

Initialization can also be started by pressing the initialization key (INIT). See section 7.2.

8.6 Performing zero calibration

In case of inconsistencies in the closed position of the valve, e.g. with soft-seated plugs, it might be necessary to recalibrate zero. During zero calibration, the valve moves once to the closed position.

⚠ WARNING

Risk of injury by exposed moving parts on the positioner, actuator or valve.
Do not touch or block exposed moving parts.

NOTICE

The process is disturbed by the movement of the actuator or valve.
Do not perform the zero calibration while the process is running. First isolate the plant by closing the shut-off valves.

Note

A zero calibration is not possible if there is zero point shift of more than 5 %.

1. Turn ⊛ (within **Start-up [7]** menu) until **Start zero calibration [7.25]** appears.
2. Press ⊛ to start zero calibration.
3. Confirm warning with OK.
4. Wait until zero calibration is completed.

After zero calibration, the positioner remains in the **Start zero calibration [7.25]** menu item.

➔ Keep ⊛ pressed down for two seconds to return to the **main menu**.

➔ Keep ⊛ pressed down again for two seconds to return to the start screen.

8.7 Resetting the positioner

A reset allows the positioner to be reset to the default settings. The TROVIS SAFE 3793 Positioner has the following reset options:

Reset function	Description	Sample application
Reset diagnosis	Resets all diagnostic functions including graphs and histograms.	Diagnosis analyses of operating hours in the past are no longer relevant.
Reset (standard)	Resets the positioner to the state as upon delivery. Actuator and valve-specific settings remain unchanged.	Positioner has been repaired or modified. The diagnosis data are no longer relevant. The positioner must be re-initialized.
Reset (advanced)	All parameters will be reset to their defaults adjusted upon delivery.	Positioner is mounted on another actuator/valve.
Restart	The positioner is shut down and restarted.	Putting the valve back into operation after a malfunction
Reset initialization	All parameters for the start-up settings (see section 8.2) are reset. The positioner needs to be re-initialized afterwards.	Changes to the start-up settings are necessary.

1. Turn ⊛ (within **main menu**) until **Reset functions [11]** appears.
2. Press ⊛ to go to the menu.
3. Turn ⊛ to select a reset function.
4. Press ⊛ to perform the reset function.
5. Confirm warning with OK.
6. Wait until the reset function is completed.

9 Maintenance

Note

The positioner was checked by SAMSON before it left the factory.

- *The product warranty becomes void if service or repair work not described in these instructions is performed without prior agreement by SAMSON's After-sales Service.*
- *Only use original spare parts by SAMSON, which comply with the original specifications.*

9.1 Cleaning the window in the cover

NOTICE

Incorrect cleaning will damage the window. The window is made of Makrolon® and will be damaged when cleaned with abrasive cleaning agents or agents containing solvents.

- *Do not rub the window dry.*
- *Do not use any cleaning agents containing chlorine or alcohol or abrasive cleaning agents.*
- *Use a non-abrasive, soft cloth for cleaning.*

9.2 Preparation for return shipment

Defective positioners can be returned to SAMSON for repair.

Proceed as follows to return devices to SAMSON:

1. Put the control valve out of operation. See associated valve documentation.
2. Fill in the Declaration on Contamination. The declaration form can be downloaded from our website at ▶ *www.samson.de > Service & Support > After-sales Service*.
3. Remove the positioner (see section 11).
4. Send the positioner to your nearest SAMSON subsidiary. SAMSON subsidiaries are listed on our website at ▶ *www.samson.de > About SAMSON > Sales offices*.

9.3 Firmware update

Contact your local SAMSON engineering and sales office or subsidiary (▶ *www.samson.de > About SAMSON > Sales offices*) to request a firmware update.

Required specifications

Please submit the following details on requesting a firmware update:

- Type
- Serial number
- Configuration ID
- Current firmware version
- Required firmware version

10 Malfunctions

Malfunctions are indicated on the display by error messages in conjunction with an icon for status classification (see Table 23) and an error ID. Table 24 lists possible error messages and recommended action.

Note

– Contact SAMSON's After-sales Service department for malfunctions not listed in the table.
– The status classification of error messages can be changed in SAMSON's TROVIS-VIEW software.

Table 23: *Icon showing status classification*

Icon	Meaning
	Failure
	Function check
	Out of specification
	Maintenance demanded

Table 24: *Troubleshooting*

Error ID	Status	Message	Recommended action
1		Init: rated travel not achieved	➔ Check attachment and pin position.
3		Valve does not move	➔ Check positioner mounting, pin position and supply air. Check piping and configuration of the mounting parts. Move the positioner out of the fail-safe position.
21		Pin position incorrect	➔ Check pin position.
27		Positioner not initialized	➔ Perform an initialization.
31		Initialization canceled (external)	➔ Check power supply. ➔ Check whether the forced venting is active.

Error ID	Status	Message	Recommended action
100		P3799: combination	➔ Check configuration. Install correction pneumatic modules.
101		No pneumatic module installed	➔ Install pneumatic module (at least one pneumatic module must be installed).
144		Temperature below minimum temperature	➔ Check the ambient temperature.
145		Temperature above maximum temperature	➔ Check the ambient temperature.
146		Function check active	The positioner is in the test mode (e.g. initialization process, step response test etc.). ➔ Wait until the test is completed or cancel it.
149		Brownout	➔ Check power supply.
153		Current too low	➔ Check power supply.
154		Current too high	➔ Check power supply.
155		Dynamic stress factor exhausted.	➔ We advise ordering the spare part soon.
156		Total valve travel exceeded	➔ Check the control valve to ensure it functions properly.
157		Forced venting	➔ Check supply voltage. Search for the reason why the forced venting was triggered.
162		Combination Z3799	➔ Remove the option module and, if necessary, replace it with another option module.
194		Tolerance band (set point deviation)	➔ Check positioner attachment and supply pressure.
195		Lower end position shifted	➔ Check seat and plug.
196		Upper end position shifted	➔ Check seat and plug.
201		Switch position for forced venting function incorrect	➔ Set correct switch position.
207		No supply pressure	➔ Check the supply pressure.

Error ID	Status	Message	Recommended action
208		Supply pressure > 10 bar	➔ Check the supply pressure.
209		Pressure sensors failed	➔ Check the supply pressure. ➔ Check power supply.
211		Emergency mode active	➔ Check travel measurement.
212		Friction change (mid-position)	The friction conditions have changed. ➔ Check the positioner's mechanical functions and set-up.
213		Friction change (open position)	
214		Friction change (closed position)	

Table 25: *Further troubleshooting*

Description of fault	Measures
No reading on the display	➔ Check electrical connection and power supply. ➔ Check the ambient temperature (the display's operating range is from –30 to +65 °C).
Actuator moves too slowly	➔ Check the supply pressure. ➔ Deactivate software restriction. ➔ Correct setting for filter (transit time). ➔ Insert second pneumatic module. ➔ Check the cross-section of the piping and screw fittings. ➔ Check the configuration of the mounting parts.
Actuator moves in the wrong direction.	➔ Check the characteristic setting. ➔ Check the setting for OUTPUT. ➔ Check piping. ➔ Check the configuration of the mounting parts.
Air leaks from the positioner.	➔ Check the installation of the pneumatic modules. ➔ Seal ports 79 and 238 with a dummy plate. ➔ Check the seals in the connecting plate.
Limit switch does not work properly	➔ Check the mounting and cabling. ➔ Check polarity of signal wires.

10.1 Emergency action

Upon failure of the air supply, the positioner vents the actuator, causing the valve to move to the fail-safe position determined by the actuator. Upon failure of the electrical signal, the pneumatic outputs of the positioner are either vented or filled with air depending on the combination of the pneumatic modules (see Table 14 on page 69).

The plant operator is responsible for emergency action to be taken in the plant.

Tip

Emergency action in the event of valve failure is described in the associated valve documentation.

11 Decommissioning and removal

DANGER

Risk of fatal injury due to ineffective explosion protection.

The explosion protection becomes ineffective when the positioner cover is opened.

The following regulations apply to installation in hazardous areas: EN 60079-14 (VDE 0165, Part 1).

NOTICE

The process is disturbed by interrupting closed-loop control.

Do not mount or service the positioner while the process is running and only after isolating the plant by closing the shut-off valves.

11.1 Decommissioning

To decommission the positioner before removing it, proceed as follows:

1. Disconnect and lock the air supply and signal pressure.
2. Open the positioner cover and disconnect the wires for the control signal.

11.2 Removing the positioner

1. Disconnect the wires for the control signal from the positioner.
2. Disconnect the lines for supply air and signal pressure (not required for direct attachment using a connection block).
3. To remove the positioner, loosen the three fastening screws on the positioner.

11.3 Disposal

We are registered with the German national register for waste electric equipment (stiftung ear) as a producer of electrical and electronic equipment, WEEE reg. no.: DE 62194439

➔ Observe local, national and international refuse regulations.

➔ Do not dispose of components, lubricants and hazardous substances together with your other household waste.

Tip

On request, we can appoint a service provider to dismantle and recycle the product.

12 Appendix

12.1 After-sales service

Contact SAMSON's After-sales Service for support concerning service or repair work or when malfunctions or defects arise.

E-mail address

You can reach our after-sales service at aftersalesservice@samson.de.

Addresses of SAMSON AG and its subsidiaries

The addresses of SAMSON AG, its subsidiaries, representatives and service facilities worldwide can be found on our website (www.samson.de) or in all SAMSON product catalogs.

Required specifications

Please submit the following details:

- Order number and position number in the order
- Type, serial number, firmware version, device version

12.2 Structure of the main display

Display/numbering	Description
0-0	Start screen: Valve position in %
0-1	Valve position in degrees
0-2	Set point in %
0-3	Set point deviation in %
0-4	Supply pressure in bar
0-5 [1)]	Status of pneumatic module in slot A
0-6 [1)]	Status of pneumatic module in slot B
0-7 [1)]	Status of option module in slot C
0-8 [1)]	Status of option module in slot D
0-9	Messages
0-10	Press ⊛ to go to the menu level.

1) Only visible in the event of an error condition

12.3 Menu structure and parameters (menu level)

Note

The availability of executed menu items and parameters depends on the positioner's configuration and the option modules used.

12.3.1 Parameters for on-site operation

Menu		Adjustment range/values [default setting]/description
Main menu		
Target operating mode	1	**[AUTO]:** Automatic mode **SAFE:** Fail-safe position **MAN:** Manual mode Switchover from automatic to manual mode is bumpless.
Set point (open-loop control)	2	**–90.0 to 90.0°** [–30.0°] The valve can be moved manually by a positioner in open-loop control mode (positioner not yet initialized) by determining a set point. The reading in degrees is not absolute and only intended as a guide.
Manual set point (MAN)	3	**–25.0 to 125.0 %** [0.0 %] Adjust the manual set point with the rotary pushbutton. The current travel/angle is displayed in % when the positioner is initialized. If the positioner is not initialized, the position of the lever in relation to the longitudinal axis is indicated in degrees (°).
Reason for fail-safe position	4	Reason for change to fail-safe position displayed. The parameter is only displayed in the event of a change to the fail-safe position.
Change reading direction	5	**Reading direction** / **Reading direction** The reading direction of the display is turned by 180°.
User level	6	**[On-site: read]/On-site: write** The option to change data is unlocked (revoked if no settings are entered within five minutes).

Menu		Adjustment range/values [default setting]/description
Start-up	**7**	
Actuator	7.1	**[Linear actuator]** **Rotary actuator** **Linear actuator (expert)** Select type of actuator: linear actuator (expert) with separate setting options for pin position and nominal range.
Pin position		Follower pin must be mounted in the proper position depending on the valve travel/opening angle (see section 3.6 on page 29).
Pin position for linear actuator	7.2	**[None]/17/25/35/50/70/100/200/300 mm**
Pin position for rotary actuator	7.3	**[90°]/No lever**
Pin position for linear actuator (expert)	7.4	**[10] to 655 mm**
Nominal range		The possible adjustment range **depends on the selected pin position.** If no pin position has been entered, 'Nominal range' is only available for the 'Linear actuator (expert)' actuator type.
Nominal range for linear actuator	7.5	**3.6 to 300.0 mm**
Nominal range for rotary actuator	7.6	**9.0 to 170.0°**
Nominal range for linear actuator (expert)	7.7	**3.6 to 999.0 mm**
Max. nom. range	7.8	Maximum possible nominal range displayed, depending on values entered for pin position.
Detected nominal range	7.9	Determined nominal range for rotary actuators displayed.
Initialization mode	7.10	**[MAX]:** Travel/angle of the closure member from the CLOSED position to the opposite stop in the actuator. **NOM:** Travel/angle of the closure member measured from the CLOSED position to the indicated OPEN position. **MAN:** Manually selected range **SUB:** Substitute calibration (without initialization)

Menu		Adjustment range/values [default setting]/description
Fail-safe position	7.11	**[ATO]:** AIR TO OPEN ➔ The signal pressure opens the valve, e.g. for a fail-close valve. **ATC:** AIR TO CLOSE ➔ The signal pressure closes the valve, e.g. for a fail-open valve. Define the fail-safe position of the valve (0 %) taking the valve type and the actuator's direction of action into account:
Set point (open-loop control)	7.12	**–90.0 to 90.0**° [–30.0°]
Adopt valve position 1	7.13	Manually adjusted **first end position** of the valve in ***MAN*** initialization mode Confirm to adopt.
Valve position 1	7.14	Reading only (lever position in degrees)
Adopt valve position 2	7.15	Manually adjusted **second end position** of the valve in ***MAN*** initialization mode Confirm to adopt.
Valve position 2	7.16	Reading only (lever position in degrees)
Current valve position	7.17	**–25.0 to 125.0 %** [0.0 %]
Direction of rotation	7.18	**Counterclockwise/[Clockwise]** Determine the lever's direction of rotation. For example: The valve closes when the plug stem moves downward. This action causes the positioner's lever to turn counterclockwise (when looking at the display). ➔Setting: Counterclockwise
Output P3799 (primary)	7.19	**[OUTPUT 138]/OUTPUT 238** The primary output on which the fail-safe position is based must be assigned.
Mounted device	7.20	**[No device]** **Quick exhaust valve** **Fast air supply**
Software restriction		The software restriction serves to adapt the air output capacity to the size of the actuator.
Supply	7.21	**25/50/75/[100 %]**
Exhaust	7.22	**25/50/75/[100 %]**
Start initialization	7.23	Confirm to start.
Start zero calibration	7.24	Confirm to start.

Menu		Adjustment range/values [default setting]/description
Configuration	**8**	
Set point processing	8.1	
Lower w-range value	8.1.1	**[0.0] to 75.0 %** The lower set point range value must be lower than upper range value (w-end), 0 % = 4 mA. The set point range is the difference between w-end and w-start and must be Δw ≥ 25 % = 4 mA. When the set point range of 0 to 100 % = 4 to 20 mA, the valve must move through its entire operating range from 0 to 100 % travel/angle of rotation. In split-range operation, the valves operate with smaller set points. The control signal of the control unit to control two valves is divided such, for instance, that the valves move through their full travel/angle of rotation at only half the input signal (first valve set to 0 to 50 % = 4 to 12 mA and second valve set to 50 to 100 % =12 to 20 mA).
Upper w-range value	8.1.2	**25.0 to [100.0 %]** The upper range value of the set point range must be greater than lower range value (w-start).
Direction of action	8.1.3	**[Increasing/increasing] or Increasing/decreasing** The set point's effect on the valve position is determined as follows: – Increasing/increasing: a globe valve opens as the set point increases. – Increasing/decreasing: a globe valve closes as the set point increases.
Lower switching threshold	8.1.4	**12.5 %** (predefined value) If the set point drops below the lower switching threshold, the valve closes (see Fig. 2 on page 20).
Upper switching threshold	8.1.5	**75 %** (predefined value) If the set point exceeds the upper switching threshold, the valve fully opens (see Fig. 2 on page 20).

Menu		Adjustment range/values [default setting]/description
Ramp time (rising)	8.1.6	**[0.0] to 10000.0 s** Time required to move through the operating range when the valve opens. For some applications it is recommendable to limit the transit time of the actuator to prevent it from engaging too fast in the running process.
Ramp time (falling)	8.1.7	**[0.0] to 10000.0 s** Time required to move through the operating range when the valve closes.
Travel/sec. (rising)	8.1.8	**1.0 to 100.0 %** [10.0 %] Required travel change in % per second
Travel/sec. (falling)	8.1.9	**1.0 to 100.0 %** [10.0 %] Required travel change in % per second
Lower end position	8.1.10	[Active]/Not active
End position w <= (	8.1.11	**0.0 to 49.0 %** [1.0 %] If the set point w reaches up to the entered percentage at the final value that causes the valve to close, the actuator is immediately completely vented (with AIR TO OPEN) or filled with air (with AIR TO CLOSE). This action always lead to maximum tight-closing of the valve.
Upper end position	8.1.12	**Active/[Not active]**
End position w >=	8.1.13	**51.0 to 100.0 %** [99.0 %] If the set point w reaches up to the entered percentage at the final value that causes the valve to open, the actuator is immediately filled with air (with AIR TO OPEN) or completely vented (with AIR TO CLOSE). This action always lead to the valve being completely opened. Example: set the cutoff to 99 % for three-way valves.
Identification	8.2	
Firmware version	8.2.1	Read only Indicates current firmware version.
Serial number	8.2.2	Read only Indicates serial number.
Positioner	8.2.3	Confirm to display production number

Menu		Adjustment range/values [default setting]/description
HART® communication	8.3	
Non-conducting	8.3.1	**Yes/[No]**
Fixed value (communication)	8.3.2	**Active/[Not active]**
Fixed value (communication)	8.3.3	**1.0 to [100.0 %]**
Polling address	8.3.4	**[0] to 63**
Loop current value	8.3.5	**0/1**
Tag no.	8.3.6	**Entry of max. 8 characters**
Tag no. (long)	8.3.7	**Entry of max. 32 characters**
Preambles	8.3.8	**[5] to 20**
Find device flag	8.3.9	**Yes/[No]**
Control parameters	8.4	
Dead band	8.4.1	**[0.1] to 100.0 %**
Activate integral-action component	8.4.2	**[Active]** (PID)**/Not active** (PD) The control mode can be changed from PD to PID controller and vice versa.
Kp (supply)	8.4.3	**[3.5] to 100** Gain setting of the proportional component for supply
Ki (supply)	8.4.4	**0.1 to 3.0** [0.8] Gain setting of the integral-action component for supply
Kd (supply)	8.4.5	**0.5 to 100.0** [20.0] Gain setting of the derivative component for supply
Kp (exhaust)	8.4.6	**[3.5] to 100.0** Gain setting of the proportional component for exhaust
Ki (exhaust)	8.4.7	**0.1 to 3.0** [0.8] Gain setting of the integral-action component for exhaust
Kd (exhaust)	8.4.8	**0.5 to 100.0** [20.0] Gain setting of the derivative component for exhaust
Software restriction (supply)	8.4.9	**25/50/75/[100 %]** Setting of the flow rate restriction in % in the pneumatic module (slot A) during supply

Menu		Adjustment range/values [default setting]/description
Software restriction (exhaust)	8.4.10	**25/50/75/[100 %]** Setting of the flow rate restriction in % in the pneumatic module (slot A) during exhaust
End position (optimized)	8.4.12	**[Active]/Not active**
Slot options	8.5	
Forced venting switch	8.5.1	Read only
Status Z3799 C	8.5.2	Read only
Identification	8.5.3	Read only
Slot C	8.5.4	**Parameters for C.1/C.2/C.3 (see section 12.3.2)**
Status Z3799 D	8.5.5	Read only
Identification	8.5.6	Read only
Slot D	8.5.7	**Parameters for D.1/D.2/D.3 (see section 12.3.2)**
Pneumatic modules	8.6	
P3799 A: status	8.6.1	Read only
Identification	8.6.2	Read only
P3799 B: status	8.6.3	Read only
Identification	8.6.4	Read only

12.3.2 Parameters of option modules

i ***Note***

The availability of parameters depends on the option modules used.

Menu		Adjustment range/values [default setting]/description
Configuration	**8**	
Slot options	8.5	
Slot C	8.5.4	
Slot C.1/C.2/C.3	8.5.4.2.../8.5.4.4.../8.5.4.6...	
Slot D	8.5.7	
Slot D.1/D.2/D.3	8.5.7.2.../8.5.7.4.../8.5.7.6...	
Terminal designation	1	Read only

Menu		Adjustment range/values [default setting]/description
Function	… .2	Binary input (24 V)
Configuration	… .3	Contact (switch) Contact (0 to 24 V)
Action upon active binary input	… .4	Switching state Activate local write protection Start PST Start FST Move valve to fixed value
Fixed value over binary input	… .5	0.0 to 100.0 %
Edge control	… .6	Active = Switch closed Active = Switch open
Function	… .7	Reading Software limit switch Fault alarm output
Mode	… .8	Below limit Above limit
Edge control	… .9	Conducting/high Locking/low
Function	… .10	Leakage sensor
Function	… .11	Position transmitter
Position transmitter's direction of action	… .12	Increasing/increasing Increasing/decreasing
Error message at position transmitter	… .13	None low high
Limit	… .14	–20.0 to 120.0 %
Current state	… .15	Read only
Signal of analog output	… .16	Read only
Current state	… .17	Read only
Signal of analog output	… .18	Read only
Start test	… .19	Confirm to start.
Start test	… .20	Confirm to start.
Test mode	… .21	Read only

Menu		Adjustment range/values [default setting]/description
Test signal of analog output	... .22	–10.0 to 110.0 %

12.3.3 Readable process data

Menu		Adjustment range/values [default setting]/description
Process data	**9**	
Current operating mode	9.1	Indicates current operating mode
Reason for fail-safe position	9.2	Reason for fail-safe position displayed
Set point	9.3	Reading in %
Manual set point (MAN)	9.4	Reading of adjusted set point
Set point after filter	9.5	Reading of adjusted set point after set point processing (split range, tight-closing function etc.)
Valve position	9.6	Reading in %
Valve position	9.7	Reading in degrees
Set point deviation	9.8	Reading in %
Supply pressure	9.9	Reading in bar
Temperature inside device	9.10	Reading in °C
Fixed value (communication)	9.11	Active/Not active
Fixed value (communication)	9.12	Reading in %
Fixed value over binary input	9.13	Active/Not active
Fixed value over binary input	9.14	Reading in %
T98 (supply)	9.15	Reading in ms: time required to fill with air to achieve a step from 0 to 98 %. The value is determined during initialization.
T98 (exhaust)	9.16	Reading in ms: time required to vent to achieve a step from 0 to 98 %. The value is determined during initialization.

Menu		Adjustment range/values [default setting]/description
Diagnosis/maintenance	**10**	
Device state	10.1	
Status messages	10.1.1	
Condensed state	10.1.1.1	
Start-up	10.1.1.2	**Messages which may be displayed: see section 12.3.4**
Configuration	10.1.1.25	
Process data	10.1.1.38	
Diagnostics	10.1.1.44	
Pressure sensors exist	10.1.2	Yes/No reading
OUTPUT 138: pressure	10.1.3	Reading in bar
OUTPUT 238: pressure	10.1.4	Reading in bar
Supply pressure	10.1.5	Reading in bar
Total valve travel	10.1.6	Totaled full valve travel cycle
Total valve travel limit x 1000	10.1.7	Limit of total valve travel limit
Lag time for set point deviation	10.1.8	Reading in s. The lag time can only be set using the operator software.
Tolerance band for set point deviation +/-	10.1.9	Used for error monitoring.
Max. temperature inside device [1)]	10.1.10	Reading in °C
Min. temperature inside device [1)]	10.1.11	Reading in °C
Operating hours counter	10.1.12	Reading in d:hh:mm:ss
Number of initializations	10.1.13	Number since the last initialization
Number of zero calibrations	10.1.14	Number since the last zero calibration
Tests	10.2	
Step response test (PST)	10.2.1	
Start test	10.2.1.1	Start test
Test status	10.2.1.3	Reading as progress bar
Canceled: x monitoring	10.2.1.4	Reading in %. Canceled when range is violated.

Menu		Adjustment range/values [default setting]/description
Step response test (FST)	10.2.2	
Start test	10.2.2.1	Start test
Test status	10.2.2.3	Reading as progress bar

1) The displayed value is merely intended as information. No error message is displayed with the ambient temperature exceeds or falls below the permissible range (see section 3.7 on page 30).

12.3.4 Diagnosis: status messages

Menu		Adjustment range/values [default setting]/description
Diagnosis/maintenance	**10**	
Device state	10.1	
Status messages	10.1.1	
Condensed state	10.1.1.1	Status indicators
Start-up	10.1.1.2	Status indicators
Initialization error	10.1.1.3	Status indicators
Incorrect operating mode	10.1.1.4	The incorrect operating mode is set.
	10.1.1.5	Confirm to clear message.
Travel too small	10.1.1.6	The determined travel is below the limit.
	10.1.1.7	Confirm to clear message.
Rated travel not achieved	10.1.1.8	The detected rated travel is smaller than the value in the setting.
	10.1.1.9	Confirm to clear message.
No movement	10.1.1.10	Possible cause: valve blockage.
	10.1.1.11	Confirm to clear message.
Pin position	10.1.1.12	The adjusted lever M does not match the rated travel.
	10.1.1.13	Confirm to clear message.
Canceled (control accuracy)	10.1.1.14	Control criteria are not fulfilled.
	10.1.1.15	Confirm to clear message.
Low control accuracy	10.1.1.16	Control criteria are not fulfilled. The positioner remains ready for use.
	10.1.1.17	Confirm to clear message.
Positioner not initialized	10.1.1.18	The positioner needs to be initialized.

Menu		Adjustment range/values [default setting]/description
Initialization canceled (external)	10.1.1.19	Initialization was canceled, e.g. due to forced venting or IP shutdown.
	10.1.1.20	Confirm to clear message.
Angle limitation	10.1.1.21	The maximum permissible angle of rotation (±30°) has been exceeded.
	10.1.1.22	Confirm to clear message.
Timeout	10.1.1.23	Initialization takes too long. Possible cause: valve blockage.
	10.1.1.24	Confirm to clear message.
Configuration	10.1.1.25	Status indicators
P3799: combination	10.1.1.26	Impermissible combination of pneumatic modules (see Table 14 on page 69).
No pneumatic module	10.1.1.27	Message when no pneumatic module has been inserted (at least one pneumatic module must be inserted).
Pressure sensor failure	10.1.1.28	No more communication with pressure sensors. Defective pressure sensors.
	10.1.1.29	Confirm to clear message.
Combination Z3799	10.1.1.30	The identical option module has been inserted into slot C and D.
Forced venting switch incorrect	10.1.1.31	Forced venting switch is set as described in Table 18 on page 86.
Slot C.1: binary input active	10.1.1.32	State is active.
Slot C.2: binary input active	10.1.1.33	State is active.
Slot C.3: binary input active	10.1.1.34	State is active.
Slot D.1: binary input active	10.1.1.35	State is active.
Slot D.2: binary input active	10.1.1.36	State is active.
Slot D.3: binary input active	10.1.1.37	State is active.
Process data	10.1.1.38	Status indicators

Menu		Adjustment range/values [default setting]/description
Operating mode not AUTO	10.1.1.39	Current operating mode is not AUTO.
Forced venting function	10.1.1.40	The forced venting is active.
Test in progress	10.1.1.41	A test is being performed.
Emergency mode active	10.1.1.42	Emergency mode is active. Possible cause: travel measurement does not function properly.
	10.1.1.43	Confirm to clear message.
Diagnostics	10.1.1.44	Status indicators
No supply pressure	10.1.1.50	No supply pressure is available.
Low supply pressure	10.1.1.51	Supply pressure is too low.
Supply pressure > 10 bar	10.1.1.52	Supply pressure is too high.
PST	10.1.1.53	Status indicators
PST: cancellation criteria met	10.1.1.54	PST is canceled.
PST: start criteria not met	10.1.1.55	PST did not start.
FST	10.1.1.56	Status indicators
FST: cancellation criteria met	10.1.1.57	FST is canceled.
FST: start criteria not met	10.1.1.58	FST did not start.
Pneumatic module A (P3799 A)	10.1.1.59	Status indicators
P3799: failure	10.1.1.60	Error in pneumatic module. Replacement may be necessary.
	10.1.1.61	Confirm to clear message.
P3799: movement impaired	10.1.1.62	Possible cause: no supply pressure, internal error, defect.
	10.1.1.63	Confirm to clear message.
P3799: maintenance required	10.1.1.64	Possible cause: the friction conditions have changed.
	10.1.1.65	Confirm to clear message.
P3799: initialization error	10.1.1.66	Conditions for initialization not fulfilled.
	10.1.1.67	Confirm to clear message.
Pneumatic module B (P3799 B)	10.1.1.68	Status indicators

Menu		Adjustment range/values [default setting]/description
P3799: failure	10.1.1.69	Error in pneumatic module. Replacement may be necessary.
	10.1.1.70	Confirm to clear message.
P3799: movement impaired	10.1.1.71	Possible cause: no supply pressure, internal error, defect.
	10.1.1.72	Confirm to clear message.
P3799: maintenance required	10.1.1.73	Possible cause: the friction conditions have changed.
	10.1.1.74	Confirm to clear message.
P3799: initialization error	10.1.1.75	Conditions for initialization not fulfilled.
	10.1.1.76	Confirm to clear message.
AMR signal outside range	10.1.1.77	Travel measurement is defective.
	10.1.1.78	Confirm to clear message.
Hardware error	10.1.1.79	Internal device error. Initialization key (INIT) jammed. Contact SAMSON's After-sales Service department.
Limit for total valve travel exceeded	10.1.1.80	Limit of total valve travel limit exceeded.
Lower end position shifted	10.1.1.81	Possible cause: mounting arrangement or travel linkage of positioner has slipped.
	10.1.1.82	Confirm to clear message.
Upper end position shifted	10.1.1.83	Possible cause: mounting arrangement or travel linkage of positioner has slipped.
	10.1.1.84	Confirm to clear message.
Dynamic stress factor exceeded	10.1.1.85	The limit is exceeded. It may be necessary to change the valve packing.
Set point deviation	10.1.1.86	Control loop error, the valve no longer follows the controlled variable within tolerable times.
Brownout	10.1.1.87	Brief power failure. The positioner remains ready for use.
	10.1.1.88	Confirm to clear message.
Current too low	10.1.1.89	Set point <3.7 mA
IP shutdown	10.1.1.90	Set point <3.85 mA
Current too high	10.1.1.91	Set point >22 mA. The positioner remains ready for use.

Menu		Adjustment range/values [default setting]/description
Angle limitation	10.1.1.92	The maximum permissible angle of rotation (±30°) has been exceeded (only in open-loop control mode).
	10.1.1.93	Confirm to clear message.
Temperature inside device below min. limit	10.1.1.94	Warning not affecting the positioner's functioning.
Temperature inside device above max. limit	10.1.1.95	Warning not affecting the positioner's functioning.
Logging suspended	10.1.1.96	It was not possible to write all logging entries.
	10.1.1.97	Confirm to clear message.

12.3.5 Reset functions

Menu		Adjustment range/values [default setting]/description
Reset functions	**11**	
Reset diagnosis	11.1	Resets all diagnostic functions including graphs and histograms.
Reset (standard)	11.2	Resets the positioner to the state as upon delivery. Actuator and valve-specific settings remain unchanged.
Reset (advanced)	11.3	All parameters will be reset to their defaults adjusted upon delivery.
Restart	11.4	The positioner is shut down and restarted.
Reset initialization	11.5	All parameters for the start-up settings are reset. The positioner needs to be re-initialized afterwards.

SMART IN FLOW CONTROL.

SAMSON

EU Konformitätserklärung / EU Declaration of Conformity / Déclaration UE de conformité

Die alleinige Verantwortung für die Ausstellung dieser Konformitätserklärung trägt der Hersteller/
This declaration of conformity is issued under the sole responsibility of the manufacturer/
La présente déclaration de conformité est établie sous la seule responsabilité du fabricant.

Für das folgende Produkt / For the following product / Nous certifions que le produit

Stellungsregler TROVIS/TROVIS SAFE HART® /
Positioner TROVIS/TROVIS SAFE HART® / Positionneur TROVIS/TROVIS SAFE HART®
Typ / Type / Type 3793-110, -510, -810

entsprechend der EU-Baumusterprüfbescheingung BVS 16 ATEX E 117 ausgestellt von der/
according to the EU Type Examination BVS 16 ATEX E 117 issued by/
établi selon le certificat CE d'essais sur échantillons BVS 16 ATEX E 117 émis par:

DEKRA EXAM GmbH
Dinnendahlstraße 9
D-44809 Bochum
Benannte Stelle/Notified Body/Organisme notifié 0158

wird die Konformität mit den einschlägigen Harmonisierungsrechtsvorschriften der Union bestätigt /
the conformity with the relevant Union harmonisation legislation is declared with/
est conforme à la législation d'harmonisation de l'Union applicable selon les normes:

EMC 2014/30/EU	EN 61000-6-2:2005, EN 61000-6-3:2010, EN 61326-1:2006
Explosion Protection 2014/34/EU	EN 60079-0:2012+A11:2013, EN 60079-11:2012, EN 60079-15:2010, EN 60079-31:2014

Hersteller / Manufacturer / Fabricant:

SAMSON AKTIENGESELLSCHAFT
Weismüllerstraße 3
D-60314 Frankfurt am Main
Deutschland/Germany/Allemagne

Frankfurt / Francfort, 2017-01-26
Im Namen des Herstellers/ On behalf of the Manufacturer/ Au nom du fabricant.

i.V. Gert Nahler

Gert Nahler
Zentralabteilungsleiter/Head of Department/Chef du département
Entwicklung Automation und Integrationstechnologien/
Development Automation and Integration Technologies

i.V. Julian Fuchs

Dr. Julian Fuchs
Zentralabteilungsleiter/Head of Department/Chef du département
Entwicklung Ventilanbaugeräte und Messtechnik

ce_3793-110-510-810_de_en_fro_rev06.pdf

SAMSON AKTIENGESELLSCHAFT
Weismüllerstraße 3 60314 Frankfurt am Main
Telefon: 069 4009-0 · Telefax: 069 4009-1507
E-Mail: samson@samson.de
Revison 06

SMART IN FLOW CONTROL.

SAMSON

EU Konformitätserklärung / EU Declaration of Conformity / Déclaration UE de conformité

Die alleinige Verantwortung für die Ausstellung dieser Konformitätserklärung trägt der Hersteller/
This declaration of conformity is issued under the sole responsibility of the manufacturer/
La présente déclaration de conformité est établie sous la seule responsabilité du fabricant.

Für das folgende Produkt / For the following product / Nous certifions que le produit

Stellungsregler TROVIS/TROVIS SAFE HART® /
Positioner TROVIS/TROVIS SAFE HART® / Positionneur TROVIS/TROVIS SAFE HART®
Typ / Type / Type 3793-850

entsprechend der Baumusterprüfbescheingung BVS 16 ATEX E 123 ausgestellt von der/ according to the Type Examination BVS 16 ATEX E 123 issued by/
établi selon le certificat d'essais sur échantillons BVS 16 ATEX E 123 émis par:

DEKRA EXAM GmbH
Dinnendahlstraße 9
D-44809 Bochum

wird die Konformität mit den einschlägigen Harmonisierungsrechtsvorschriften der Union bestätigt / the conformity with the relevant Union harmonisation legislation is declared with/
est conforme à la législation d'harmonisation de l'Union applicable selon les normes:

EMC 2014/30/EU	EN 61000-6-2:2005, EN 61000-6-3:2010, EN 61326-1:2006
Explosion Protection 2014/34/EU	EN 60079-0:2012+A11:2013, EN 60079-15:2010

Hersteller / Manufacturer / Fabricant:

SAMSON AKTIENGESELLSCHAFT
Weismüllerstraße 3
D-60314 Frankfurt am Main
Deutschland/Germany/Allemagne

Frankfurt / Francfort, 2017-01-26
Im Namen des Herstellers/ On behalf of the Manufacturer/ Au nom du fabricant.

i.V. Gert Nahler

Gert Nahler
Zentralabteilungsleiter/Head of Department/Chef du département
Entwicklung Automation und Integrationstechnologien/
Development Automation and Integration Technologies

i.V. [illegible]

Dr. Julian Fuchs
Zentralabteilungsleiter/Head of Department/Chef du département
Entwicklung Ventilanbaugeräte und Messtechnik

ce_3793-850_de_en_fra_rev06.pdf

SAMSON AKTIENGESELLSCHAFT
Weismüllerstraße 3 60314 Frankfurt am Main
Telefon: 069 4009-0 · Telefax: 069 4009-1507
E-Mail: samson@samson.de
Revison 06

Translation

1 # EU-Type Examination Certificate

2 **Equipment intended for use in potentially explosive atmospheres**
Directive 2014/34/EU

3 EU-Type Examination Certificate Number: **BVS 16 ATEX E 117**

4 Product: **Positioner type TROVIS / TROVIS SAFE 3793 - **0 HART®**

5 Manufacturer: **SAMSON AG**

6 Address: **Weismüllerstraße 3, 60314 Frankfurt am Main, Germany**

7 This product and any acceptable variations thereto are specified in the appendix to this certificate and the documents referred to therein.

8 DEKRA EXAM GmbH, Notified Body number 0158, in accordance with Article 17 of Directive 2014/34/EU of the European Parliament and of the Council, dated 26 February 2014, certifies that this product has been found to comply with the Essential Health and Safety Requirements relating to the design and construction of products intended for use in potentially explosive atmospheres given in Annex II to the Directive.
The examination and test results are recorded in the confidential Report No. BVS PP 16.2199 EU.

9 Compliance with the Essential Health and Safety Requirements has been assured by compliance with:

EN 60079-0:2012 + A11:2013	**General requirements**
EN 60079-11:2012	**Intrinsic Safety "i"**
EN 60079-15:2010	**Equipment protection by type of protection "n"**
EN 60079-31:2014	**Protection by Enclosure "t"**

10 If the sign "X" is placed after the certificate number, it indicates that the product is subject to the Special Conditions for Use specified in the appendix to this certificate.

11 This EU-Type Examination Certificate relates only to the design and construction of the specified product. Further requirements of the Directive apply to the manufacturing process and supply of this product. These are not covered by this certificate.

12 The marking of the product shall include the following:

Ex **II 2G Ex ia IIC T4/T6 Gb** **II 2D Ex ia IIIC T85°C Db**	for type 3793 - 110
Ex **II 3G Ex nA IIC T4/T6 Gc** **II 2D Ex tb IIIC T85°C Db**	for type 3793 - 810
Ex **II 2D Ex tb IIIC T85°C Db**	for type 3793 - 510

DEKRA EXAM GmbH
Bochum, 2016-12-01

Signed: Dr. Franz Eickhoff
Certifier

Signed: Ralf Leiendecker
Approver

DAkkS Deutsche Akkreditierungsstelle D-PL-12069-01-00

This certificate may only be reproduced in its entirety and without any change.

DEKRA EXAM GmbH, Dinnendahlstrasse 9, 44809 Bochum, Germany,
telephone +49.234.3696-105, Fax +49.234.3696-110, zs-exam@dekra.com

13 **Appendix**

14 **EU-Type Examination Certificate**

BVS 16 ATEX E 117

15 **Product description**

15.1 **Subject and type**

Positioner TROVIS / TROVIS SAFE 3793 HART®

3 7 9 3 - b c d e f g h i j k l m n o p q

b c d e f g h i j k l m n o p q
x x x x x x x x x x x x x x x x

Explosion protection
1 1 0 II 2G Ex ia IIC T4/T6 Gb / II 2D Ex ia IIIC T85°C Db
5 1 0 II 2D Ex tb IIIC T85°C Db
8 1 0 II 3G Ex nA IIC T4/T6 Gc / II 2D Ex tb IIIC T85°C Db

b c d
Function (not safety relevant)

e
Pneumatics (not safety relevant)

f g
Option module 1
0 0 Without
1 0 with Software Limit Switches, Binary Input and Output (Code N)
4 0 with Position Transmitter Binary Input and Output (Code T)
8 0 with Forced Venting, Binary Input and Output (Code V)

h i
Option module 2
0 0 Without
1 0 with Software Limit Switches, Binary Input and Output (Code N)
4 0 with Position Transmitter, Binary Input and Output (Code T)
8 0 with Forced Venting, Binary Input and Output (Code V)
1 5 with Inductive Limit Switches (NC) and Binary Output (Code P)
1 6 with Inductive Limit Switches (NO) and Binary Output (Code P)
3 0 with Mechanical Limit Switches (NO/NC)

j k
Pressure sensor
0 Without
1 with Pressure Sensors for p_zul, Y1 and Y2

l
Electrical connections
0 4 blanking plugs
1 1 cable gland, 3 blanking plugs

m
Housing material
0 Standard aluminum die cast
1 Stainless steel

n
Special applications (not safety relevant)

o
Additional approvals (not safety relevant)

p
Ambient temperature (not safety relevant)

q

This certificate may only be reproduced in its entirety and without any change.

DEKRA EXAM GmbH, Dinnendahlstrasse 9, 44809 Bochum, Germany,
telephone +49.234.3696-105, Fax +49.234.3696-110, zs-exam@dekra.com

15.2 **Description**

The TROVIS/TROVIS SAFE 3793 HART® Positioner is a single or double acting positioner for attachment to pneumatic control valves.
The positioner ensures a predetermined assignment of the valve position (controlled variable x) to the input signal (reference variable w). It compares the input signal received from a control system to the travel or rotational angle of the control valve and issues a corresponding output signal pressure (output variable y) for the pneumatic actuator.

The apparatus consists of an enclosure with degree of protection IP66 and contains several fixed mounted PCBs. In addition to the power supply terminals +11 / -12 the device contains two slots for different options modules. The options modules provide additional connection terminals for external circuits. The serial interface (5 pin socket) for performing a firmware update may only be used by the manufacturer.

Depending on the type of the apparatus there are different types of protection:
Type 3793 - 110... has type of protection 'ia' and it may be used for Category 2G and 2D (Zone 1 and Zone 21).
Type 3793 - 510... has type of protection 'tb' and it may be used for Category 2D (Zone 21).
Type 3793 - 810... has type of protection 'nA' and 'tb' and it may be used for Category 3G and 2D (Zone 2 and Zone 21).

The options modules are exchangeable. The type of protection of the apparatus shall be marked on the type label of the options modules. It is not allowed to use an options module with type of protection 'ia', if it has ever been connected to a non-intrinsically safe circuit.

The Options Module Code P includes a Pepperl+Fuchs inductive limit switch type SJ2-SN (Certificate: PTB 00 ATEX 2049X).

For types 3793 - 110... (type of protection 'ia'), when using the options module Code P:
Two different sets of input parameters are permissible (supply variant type 2 and type 3). If the options module is supplied with parameters type 3, the ambient temperature is limited. Refer to thermal ratings.

15.3 **Parameters**

15.3.1 Electrical Parameters

15.3.1.1 Signal Circuit Terminal +11 / -12

Nominal input current	I_N	4 ... 20	mA
Nominal input power	P_N	212	mW
For types 3793 - 110...			
Maximum input voltage	U_i	28	V
Maximum input current	I_i	115	mA
Maximum input power	P_i	1	W
Maximum internal capacitance	C_i	16.3	nF
Maximum internal inductance	L_i	negligible	

This certificate may only be reproduced in its entirety and without any change.

DEKRA EXAM GmbH, Dinnendahlstrasse 9, 44809 Bochum, Germany,
telephone +49.234.3696-105, Fax +49.234.3696-110, zs-exam@dekra.com

15.3.1.2 Software Limit Switches (NAMUR) Terminals +45 / -46 and +55 / -56

Nominal input voltage	U_N	8.2	V
Nominal input power	P_N	17	mW
For types 3793 - 110...			
Maximum input voltage	U_i	16	V
Maximum input current	I_i	52	mA
Maximum input power	P_i	169	mW
Maximum internal capacitance	C_i	12.2	nF
Maximum internal inductance	L_i	negligible	

15.3.1.3 Binary Output (NAMUR) Terminal +83 / -84

Nominal input voltage	U_N	8.2	V
Nominal input power	P_N	17	mW
For types 3793 - 110...			
Maximum input voltage	U_i	16	V
Maximum input current	I_i	52	mA
Maximum input power	P_i	169	mW
Maximum internal capacitance	C_i	12.2	nF
Maximum internal inductance	L_i	negligible	

15.3.1.4 Binary Input (24 V DC) Terminal +87 / -88

Nominal input voltage	U_N	24	V
Nominal input power	P_N	120	mW
For types 3793 - 110...			
Maximum input voltage	U_i	28	V
Maximum input current	I_i	115	mA
Maximum input power	P_i	1	W
Maximum internal capacitance	C_i	11.1	nF
Maximum internal inductance	L_i	negligible	

15.3.1.5 Position Transmitter Terminal +31 / -32

Nominal input voltage	U_N	24	V
Nominal input power	P_N	518	mW
For types 3793 - 110...			
Maximum input voltage	U_i	28	V
Maximum input current	I_i	115	mA
Maximum input power	P_i	1	W
Maximum internal capacitance	C_i	11.1	nF
Maximum internal inductance	L_i	negligible	

This certificate may only be reproduced in its entirety and without any change.

DAkkS Deutsche Akkreditierungsstelle D-ZE-13069-01-00

DEKRA EXAM GmbH, Dinnendahlstrasse 9, 44809 Bochum, Germany,
telephone +49.234.3696-105, Fax +49.234.3696-110, zs-exam@dekra.com

15.3.1.6 Forced Venting Terminal +81 / -82

Nominal input voltage	U_N	24	V
Nominal input power	P_N	173	mW
For types 3793 - 110…			
Maximum input voltage	U_i	28	V
Maximum input current	I_i	115	mA
Maximum input power	P_i	1	W
Maximum internal capacitance	C_i	11.1	nF
Maximum internal inductance	L_i	negligible	

15.3.1.7 Inductive Limit Switches Terminals +41 / -42 and +51 / -52

Nominal input voltage	U_N			8.2	V
Nominal input power	P_N			17	mW
For types 3793 - 110…					
Supply variant		Type 2		Type 3	
Maximum input voltage	U_i	16	V	16	V
Maximum input current	I_i	25	mA	52	mA
Maximum input power	P_i	64	mW	169	mW
Maximum internal capacitance	C_i	71.1	nF	71.1	nF
Maximum internal inductance	L_i	100	µH	100	µH

15.3.1.8 Mechanical Limit Switches Terminals 47 / 48 / 49 and 57 / 58 / 59

Nominal input voltage	U_N	28	V
Nominal input power	P_N	10	mW
For types 3793 - 110…			
Maximum input voltage	U_i	28	V
Maximum input current	I_i	115	mA
Maximum input power	P_i	500	mW
Maximum internal capacitance	C_i	22.2	nF
Maximum internal inductance	L_i	150	µH

15.3.2 Thermal Parameters

15.3.2.1 Types 3793 - 110… Group II applications (type of protection ia)

Temperature Class	T4	$-40\ °C \leq T_{amb} \leq +80\ °C$
Temperature Class	T6	$-40\ °C \leq T_{amb} \leq +55\ °C$

Operation with Inductive Limit Switches supply variant type 3

Temperature Class	T4	$-40\ °C \leq T_{amb} \leq +70\ °C$
Temperature Class	T6	$-40\ °C \leq T_{amb} \leq +45\ °C$

15.3.2.2 Types 3793 - 110… Group III applications (type of protection ia)

Maximum surface temperature	T 85 °C	$-40\ °C \leq T_{amb} \leq +55\ °C$

15.3.2.3 Types 3793 - 810... (type of protection nA)

Temperature Class	T4	$-40\ °C \leq T_{amb} \leq +80\ °C$
Temperature Class	T6	$-40\ °C \leq T_{amb} \leq +55\ °C$

This certificate may only be reproduced in its entirety and without any change.

DEKRA EXAM GmbH, Dinnendahlstrasse 9, 44809 Bochum, Germany,
telephone +49.234.3696-105, Fax +49.234.3696-110, zs-exam@dekra.com

15.3.2.4 Types 3793 - 510... and types 3793 - 810... (type of protection tb)

Maximum surface temperature T 85 °C $-40\ °C \leq T_{amb} \leq +70\ °C$

16 **Report Number**

BVS PP 16.2199 EU, as of 2016-12-01

17 **Special Conditions for Use**

None

18 **Essential Health and Safety Requirements**

The Essential Health and Safety Requirements are covered by the standards listed under item 9.

19 **Drawings and Documents**

Drawings and documents are listed in the confidential report.

We confirm the correctness of the translation from the German original.
In the case of arbitration only the German wording shall be valid and binding.

DEKRA EXAM GmbH
Bochum, dated 2016-12-01
BVS-Le/Mu A 20131206

Certifier Approver

This certificate may only be reproduced in its entirety and without any change.

DEKRA EXAM GmbH, Dinnendahlstrasse 9, 44809 Bochum, Germany,
telephone +49.234.3696-105, Fax +49.234.3696-110, zs-exam@dekra.com

Translation

1 # Type Examination Certificate

2 **Component Intended for use on/in an Equipment or Protective System intended for use in potentially explosive atmospheres**
Directive 2014/34/EU

3 Type Examination Certificate Number: **BVS 16 ATEX E 123**

4 Product: **Positioner TROVIS / TROVIS SAFE 3793 - 850... HART®**

5 Manufacturer: **SAMSON AG**

6 Address: **Weismüllerstraße 3, 60314 Frankfurt am Main, Germany**

7 This product and any acceptable variations thereto are specified in the appendix to this certificate and the documents referred to therein.

8 DEKRA EXAM GmbH certifies that this product has been found to comply with the Essential Health and Safety Requirements relating to the design and construction of products intended for use in potentially explosive atmospheres given in Annex II to the Directive.
The examination and test results are recorded in the confidential Report No. BVS 16.2199 EU.

9 Compliance with the Essential Health and Safety Requirements has been assured by compliance with:

EN 60079-0:2012 + A11:2013	**General requirements**
EN 60079-15:2010	**Type of Protection "n"**

10 The sign "U" is placed after the certificate number. It indicates that this certificate must not be mistaken for a certificate intended for an equipment or protective system. This partial certification may be used as a basis for certification of an equipment or protective system respectively product.

11 This Type Examination Certificate relates only to the design and construction of the specified product. Further requirements of the Directive apply to the manufacturing process and supply of this product. These are not covered by this certificate.

12 The marking of the product shall include the following:

Ex **II 3G Ex nA IIC T4/T6 Gc**

DEKRA EXAM GmbH
Bochum, 2016-12-01

Signed: Dr. Franz Eickhoff
Certifier

Signed: Ralf Leiendecker
Approver

This certificate may only be reproduced in its entirety and without any change.

DEKRA EXAM GmbH, Dinnendahlstrasse 9, 44809 Bochum, Germany,
telephone +49.234.3696-105, Fax +49.234.3696-110, zs-exam@dekra.com

13 **Appendix**

14 **Type Examination Certificate**
BVS 16 ATEX E 123

15 **Product description**

15.1 **Subject and type**

Positioner TROVIS / TROVIS SAFE 3793 - 850... HART®

3 7 9 3 – b c d e f g h i j k l m n o p q

b	c	d	e	f	g	h	i	j	k	l	m	n	o	p	q
x	x	x	x	x	x	x	x	x	x	x	x	x	x	x	x

Explosion protection
8 5 0 II 3G Ex nA IIC T4/T6 Gc
b c d

Function (not safety relevant)
e

Pneumatics (not safety relevant)
f g

Option module 1
0 0 Without
1 0 with Software Limit Switches, Binary Input and Output (Code N)
4 0 with Position Transmitter Binary Input and Output (Code T)
8 0 with Forced Venting, Binary Input and Output (Code V)
h i

Option module 2
0 0 Without
1 0 with Software Limit Switches, Binary Input and Output (Code N)
4 0 with Position Transmitter, Binary Input and Output (Code T)
8 0 with Forced Venting, Binary Input and Output (Code V)
1 5 with Inductive Limit Switches (NC) and Binary Output (Code P)
1 6 with Inductive Limit Switches (NO) and Binary Output (Code P)
3 0 with Mechanical Limit Switches (NO/NC)
j k

Pressure sensor
0 Without
1 with Pressure Sensors for p_zul, Y1 and Y2
l

Electrical connections
0 4 blanking plugs
1 1 cable gland, 3 blanking plugs
m

Housing material
0 Standard aluminum die cast
1 Stainless steel
n

Special applications (not safety relevant)
o

Additional approvals (not safety relevant)
p

Ambient temperature (not safety relevant)
q

This certificate may only be reproduced in its entirety and without any change.

DEKRA EXAM GmbH, Dinnendahlstrasse 9, 44809 Bochum, Germany,
telephone +49.234.3696-105, Fax +49.234.3696-110, zs-exam@dekra.com

15.2 Description

The TROVIS/TROVIS SAFE 3793 HART® Positioner is a single or double acting positioner for attachment to pneumatic control valves.
The positioner ensures a predetermined assignment of the valve position (controlled variable x) to the input signal (reference variable w). It compares the input signal received from a control system to the travel or rotational angle of the control valve and issues a corresponding output signal pressure (output variable y) for the pneumatic actuator.

The apparatus consists of an enclosure with degree of protection IP66 and contains several fixed mounted PCBs. In addition to the power supply terminals +11 / -12 the device contains two slots for different options modules. The options modules provide additional connection terminals for external circuits. The serial interface (5 pin socket) for performing a firmware update may only be used by the manufacturer.

Type 3793 - 850... has type of protection 'nA' and it may be used for Category 3G in Zone 2.

The Options Modules are exchangeable. The type of protection 'nA' shall be ticked on the type label of the Options Modules.

15.3 Parameters

15.3.1 Electrical Parameters

15.3.1.1 Signal Circuit Terminals +11 / -12

Nominal input current	I_N	4 ... 20	mA
Nominal input power	P_N	212	mW

15.3.1.2 Software Limit Switches (NAMUR) Terminals +45 / -46 and +55 / -56

Nominal input voltage	U_N	8.2	V
Nominal input power	P_N	17	mW

15.3.1.3 Binary Output (NAMUR) Terminals +83 / -84

Nominal input voltage	U_N	8.2	V
Nominal input power	P_N	17	mW

15.3.1.4 Binary Input (24 V DC) Terminals +87 / -88

Nominal input voltage	U_N	24	V
Nominal input power	P_N	120	mW

15.3.1.5 Position Transmitter Terminals +31 / -32

Nominal input voltage	U_N	24	V
Nominal input power	P_N	518	mW

This certificate may only be reproduced in its entirety and without any change.

DEKRA EXAM GmbH, Dinnendahlstrasse 9, 44809 Bochum, Germany,
telephone +49.234.3696-105, Fax +49.234.3696-110, zs-exam@dekra.com

15.3.1.6 Forced Venting Terminals +81 / -82

Nominal input voltage	U_N	24	V
Nominal input power	P_N	173	mW

15.3.1.7 Inductive Limit Switches Terminals +41 / -42 and +51 / -52

Nominal input voltage	U_N	8.2	V
Nominal input power	P_N	17	mW

15.3.1.8 Mechanical Limit Switches Terminals 47 / 48 / 49 and 57 / 58 / 59

Nominal input voltage	U_N	28	V
Nominal input power	P_N	10	mW

15.3.2 Thermal Parameters:

Temperature Class	T4	$-40\ °C \leq T_{amb} \leq +80\ °C$
Temperature Class	T6	$-40\ °C \leq T_{amb} \leq +55\ °C$

16 **Report Number**

BVS PP 16.2199 EU, as of 2016-12-01

17 **Installation Instructions**

None

18 **Essential Health and Safety Requirements**

The Essential Health and Safety Requirements are covered by the standards listed under item 9.

19 **Drawings and Documents**

Drawings and documents are listed in the confidential report.

We confirm the correctness of the translation from the German original.
In the case of arbitration only the German wording shall be valid and binding.

DEKRA EXAM GmbH
Bochum, dated 2016-12-01
BVS-Le/Mu A 20161157

Certifier

Approver

DAkkS Deutsche Akkreditierungsstelle D-ZE-12061-01-00

This certificate may only be reproduced in its entirety and without any change.

DEKRA EXAM GmbH, Dinnendahlstrasse 9, 44809 Bochum, Germany,
telephone +49.234.3696-105, Fax +49.234.3696-110, zs-exam@dekra.com

HART® REGISTERED

Certificate of Registration
FieldComm Group Verified

Samson	TROVIS SAFE 3793
Manufacturer	Product Name
0042	42EC
Manufacturer ID (Hex)	Expanded Device Type (Hex)
7	01
HART Protocol Revision	Device Revision (Hex)
01	01
Hardware Revision (Hex)	Software Revision (Hex)
10/28/2016	FieldComm Group
Test Date	Verification Method

The above product has successfully completed the validation process and meets the requirements to be “HART REGISTERED”.

“HART REGISTERED” products conform to GB/T 29910.1-6-2013 and IEC 61158 standards.

Registration Number: L2-06-1000-580 Registration Issue Date: Dec 22, 2016 Approval: T. F. Martins

FIELDCOMM GROUP™
Connecting the World of Process Automation

HART® is a registered trademark of FieldComm Group

EB 8493S EN

SAMSON AKTIENGESELLSCHAFT
Weismüllerstraße 3 · 60314 Frankfurt am Main, Germany
Phone: +49 69 4009-0 · Fax: +49 69 4009-1507
samson@samson.de · www.samson.de

2019-09-30 · English